This is a digital copy of a book that was preserved for generations on library shelves before it was carefully scanned by Google as part of a project to make the world's books discoverable online.

It has survived long enough for the copyright to expire and the book to enter the public domain. A public domain book is one that was never subject to copyright or whose legal copyright term has expired. Whether a book is in the public domain may vary country to country. Public domain books are our gateways to the past, representing a wealth of history, culture and knowledge that's often difficult to discover.

Marks, notations and other marginalia present in the original volume will appear in this file - a reminder of this book's long journey from the publisher to a library and finally to you.

Usage guidelines

Google is proud to partner with libraries to digitize public domain materials and make them widely accessible. Public domain books belong to the public and we are merely their custodians. Nevertheless, this work is expensive, so in order to keep providing this resource, we have taken steps to prevent abuse by commercial parties, including placing technical restrictions on automated querying.

We also ask that you:

+ *Make non-commercial use of the files* We designed Google Book Search for use by individuals, and we request that you use these files for personal, non-commercial purposes.

+ *Refrain from automated querying* Do not send automated queries of any sort to Google's system: If you are conducting research on machine translation, optical character recognition or other areas where access to a large amount of text is helpful, please contact us. We encourage the use of public domain materials for these purposes and may be able to help.

+ *Maintain attribution* The Google "watermark" you see on each file is essential for informing people about this project and helping them find additional materials through Google Book Search. Please do not remove it.

+ *Keep it legal* Whatever your use, remember that you are responsible for ensuring that what you are doing is legal. Do not assume that just because we believe a book is in the public domain for users in the United States, that the work is also in the public domain for users in other countries. Whether a book is still in copyright varies from country to country, and we can't offer guidance on whether any specific use of any specific book is allowed. Please do not assume that a book's appearance in Google Book Search means it can be used in any manner anywhere in the world. Copyright infringement liability can be quite severe.

About Google Book Search

Google's mission is to organize the world's information and to make it universally accessible and useful. Google Book Search helps readers discover the world's books while helping authors and publishers reach new audiences. You can search through the full text of this book on the web at `http://books.google.com/`

Digitized by Google

PROPERTY OF
University of Michigan Libraries
1817
ARTES SCIENTIA VERITAS

Digitized by Google

Digitized by Google

Digitized by Google

Digitized by Google

Digitized by Google

VALVES AND VALVE GEARS

VOLUME I—STEAM ENGINES AND STEAM TURBINES
VOLUME II—GASOLINE, GAS AND OIL ENGINES

BY
FRANKLIN DeRONDE FURMAN, M.E.
Professor of Mechanism and Machine Design
at Stevens Institute of Technology
Member of American Society of Mechanical Engineers

VOLUME I

SECOND EDITION
RESET AND ENLARGED

NEW YORK
JOHN WILEY & SONS, INC.
LONDON: CHAPMAN & HALL, LIMITED
1915

Digitized by Google

ENGIN. LIBRARY
TJ
547
.F98
1915

Copyright, 1915, by
FRANKLIN DeRONDE FURMAN

PUBLISHERS PRINTING COMPANY
207-217 West Twenty-fifth Street, New York

Digitized by Google

PREFACE

THIS work has grown from a set of mimeographed notes which were first issued by the author in 1903. Three years ago, in order to serve their purpose better, these notes were issued privately in book form. This book referred chiefly to steam engines and briefly to steam turbines. In the present edition the matter relating to present-day reciprocating steam engines has been considerably increased, the steam turbine has been treated much more completely, and a separate volume has been added on the several types of the internal combustion engine. In all of these editions the subject of valves and valve gears has been treated from the standpoint of mechanism, rather than from that of power, and the chief aim has been to tell in particular, instead of in general, just how the engine or motor is regulated; also to tell how the valves and valve gears may be laid out, with due regard for the laws of mechanism, to give desired control of the steam or gas or other operating agent.

A feature of the present edition is a collection of all types of practical prime-mover valves into a few (seven) fundamental forms, as illustrated on pages 51 and 52, and a grouping of six fundamental types of mechanism from which all practical valve-gear constructions may be formed. These are stated on page 55. As the work grew it became evident that there would not be sufficient time for a student in any prescribed four-year engineering course to study even a minor fraction of all the successful and characteristic valve gears for the steam and internal combustion engines of the present day. The fundamental groups of valves and valve gears referred to above were then prepared with a view to having the student learn them thoroughly, and then take up at least one application of each group as it is applied in the practical valves and gears described in the book. The remaining cases constitute a ready, and it is hoped a reliable, technical reference for students and for all who may be interested in the various phases of the subject.

In order to facilitate the use of this book as a text, it has been divided into many paragraphs which are consecutively numbered in each section. An endeavor has been made to devote each paragraph to either a purely technical or purely descriptive phase of the subject in hand, so that the instructor may readily select and assign

Digitized by Google

280408

paragraphs to bring out either fundamental or applied material to suit any course of study.

The new material which has been added on the subject of the reciprocating steam engine in the present edition includes the semi-plug and high-pressure piston valves of the American Balance Valve Co., the Rice & Sargent-Corliss engine, including the Rites and Sargent governors and directions for setting valves and valve gear, Nordberg valves and valve gears, J. T. Marshall valve gear, Sulzer steam engine valve gear, Williamson steering gear, and several types of the uniflow steam engine. The Curtis "steam-actuated" and "mechanical" gears, the Westinghouse "direct" and "steam-operated" gears, and the De Laval gear have been added to the section on steam turbine. All of the material on the gasoline, gas, and oil engines is newly prepared. The method of using the sinusoidal diagram in laying out the sleeve valve in connection with the Lyons-Knight engine, and of analyzing the kinematic action of revolving engines such as the Gnome and Gyro, are original, although it is quite possible that the manufacturers have laid down work of a similar nature in the development of their respective engines.

The features of the older edition which have been retained in the present work include: the order of presentation of the topics; the numerical marking of the lines of the valve diagrams, in the order of their construction, at the beginning of the course, thus requiring synthetic as well as analytic study; the formula for determining exactly the steam lap from the Zeuner diagram when port opening, lead, and cut-off are given; the introduction of preliminary free-hand problems before taking up the regular drafting-table problems; the combining of the valve ellipse with the steam engine indicator card to determine the steam and exhaust laps, steam- and exhaust-port openings and lead while the engine is in service, or without removing the steam chest cover; the method of determining the width of the cut-off blocks for the Meyer valve; the Corliss valve-gear design; and the condensed arrangement of Auchincloss's method of design of a link motion.

In addition to the above, instances occur throughout the work where the author has been enabled to add to or rearrange the work of others, as a result of considering the subject principally from the point of view of mechanism. In most cases the information that has been made use of as a basis for the present work has been gathered from a wide range of books, periodicals, and conversations, and by far the larger part of it all may be found scattered in duplicate in various forms of record. There are instances, however, where

Digitized by Google

definite credit is due to originators of construction, method, or arrangement, and in all such cases the present writer has cheerfully given such credit in the body of the work where the references occur, so far as he has known that credit is due.

Much of the material in this work has been arranged after extended visits to drafting rooms in which the work in valve gears was being carried on in a practical way, and it is believed that the methods here presented will be found to agree fairly well with general practice. In writing up the descriptions of the practical forms of valves and valve gears the author has received numerous courtesies from manufacturers which are hereby acknowledged. It has been the rule to have the manufacturer of the valve or gear or engine described to pass finally on the accuracy of the description and of the illustrations that appear in this work. Every illustration has been newly prepared for this edition. In order to avoid the use of subscripts in numbering the illustrations and paragraphs as the work of preparation proceeded, and as changes and additions were made, the author laid out the work originally by leaving ten numbers free at the end of each section. It will be found that these numbers have been all used at the end of some of the sections and that none have been used at the end of other sections. The page numbers, however, are in consecutive order throughout the book.

In concluding, I wish to record my appreciation of the assistance and the suggestions that have been received from time to time from Dr. D. S. Jacobus, who was formerly Professor of Experimental Engineering at Stevens Institute of Technology, and from my colleagues, Professors F. L. Pryor, R. M. Anderson, and W. R. Halliday, and Messrs. C. E. Hedden and S. H. Lott.

F. DeR. Furman.

Hoboken, N. J., March, 1915.

Digitized by Google

Digitized by Google

CONTENTS

PAGES

GENERAL DEFINITIONS 1

SECTION I.—ELEMENTARY RECIPROCATING STEAM ENGINES 2–41

Names of Engine Parts Crank End, Head End, Forward Stroke, Return Stroke, Dead Center Running Over, Running Under Operation of Steam Engine Elementary Steam Valve. Steam Lap and Lap Angle Lead, Lead Angle, Angle of Advance. Exhaust Lap Finite and Infinite Connecting Rods—Effect of Angularity in the Finite Rod

Zeuner Diagram Application of Zeuner Diagram Principal Phases of a Steam-Engine Cycle Positive and Negative Exhaust Laps Exercise Drills in the Use of Zeuner Diagrams Original Exercise Problems

Steam Pipes, Steam Ports, and Steam-Port Opening Formula for Calculating Sizes of Ports and Pipes Distinction Between Steam-Port Width and Steam-Port Opening Overtravel Actual and Average Velocity of Flow of Steam Through Ports Note-Book Problems

Drafting-Table Problem No. 1—Plain D-Valve Construction of Zeuner Diagram Layout of Valve and Valve Seat Formula for Minimum Width of Bridge Formula for Width of Exhaust Port Equalizing Cut-Offs by Unequal Steam Laps Equalizing Compression by Unequal Exhaust Laps

Equalization of Release and Exhaust Closure by Unequal Exhaust Laps—Special and General Cases

Effect of Rocker Arm Equalizing Cut-Off with a Valve Having Equal Steam Laps Unequal Valve Travel on Head and Crank Ends Due to Rocker Zeuner Circles Changed to Irregular Closed Curves by Rocker

Limited Use of the Plain D-Valve

Special Valve-Diagram Exercises

Drafting-Table Problem No. 2—Design for an Allen Valve. Effect of Double-Lead and Double-Admission Areas on Zeuner Diagram Construction Locomotive Balanced Valve Limited Use of the Allen Valve

SECTION II.—VALVE DIAGRAMS FOR STEAM ENGINES 42–49

Bilgram Diagram Solution of Drafting-Table Problem No. 1 by Bilgram Diagram Reuleaux Diagram Valve Ellipse. Method of Determining Steam and Exhaust-Port Openings and Steam and Exhaust Laps by Combining the Valve Ellipse and Indicator Cards, and without Removing Steam Chest Cover Sinusoidal Diagram

Digitized by Google

PAGES

SECTION III.—FUNDAMENTAL VALVE FORMS 50–54

Effect of Friction Due to Pressure on Back of Plain D-Valve. Reciprocating Valves Rocking and Rotating Valves Lifting Valves

Flat or D-Valve Piston Valve Sleeve Valve Cylindrical Surface Valve Cylindrical End Valve Poppet Valve Butterfly Valve

SECTION IV.—FUNDAMENTAL VALVE-GEAR MECHANISMS 55–72

Crank and Connecting Rod Eccentric and Rod Double Rocker Arms Vibrating Rods Floating Levers and Links. Cams

Infinite Connecting Rod The Common Form of Crank and Connecting Rod Offset Crank and Connecting Rod The Link Trip Mechanisms

Governors Flyball or Pendulum Governors Shaft Governors

SECTION V.—PRACTICAL TYPES OF VALVES FOR RECIPROCATING STEAM ENGINES 73–145

Piston Valves "Ideal," Fitchburg, American Semi-Plug, and Vauclain Piston Valves

Balanced Valves Pressure-Plate Valves, Fixed, Adjustable, and Flexible Types "Straight-Line," Ball Telescope, Skinner, and "Jack Wilson" Pressure-Plate Valves

Auxiliary or Cut-Off and Riding Valves Gonzenbach, Polonceau, and Meyer Valves

Drafting-Table Problem No. 3—Double-Ported Valve Method of Computation When More Than One Port is Used Computation for Steam Passageway in the Valve Body Area of Exhaust Passageway in Cylinder

Drafting-Table Problem No. 4—Meyer Cut-Off Valve To Find the Cut-Off Valve Circles To Find the Relative Valve Circle Showing How Far the Two Valves Are Apart at Any Instant Explanation of the Value of "S" which Determines the Point of Cut-Off To Find "L" and to Locate the Tops of Valve Passageways Width "W" of Cut-Off Blocks

Other Applications of the Cut-Off Type of Valve Construction. Buckeye, McIntosh, Seymour & Co., and Wheelock Auxiliary or Cut-Off Valves

Rocking Steam Valves Atlas Valve

Corliss Valve and Gear Detail and Operation of Trip Mechanism or Releasing Gear Reynolds and Hewes & Phillips Types Automatic Safety Device Limited Range of Cut-Off with Single Eccentric Detail and Action of Vacuum Dashpot

Drafting-Table Problem No. 5—Corliss Valve Gear Bent Rocker to Neutralize Angularity of Connecting Rod Determining Valve Travel of Rocking Valve Determining Travel of Piston of Dashpot Avoidance of Dead Points in Valve Gear Mechanism

Rice & Sargent Corliss Engine Action of Valve Gear Rites

Digitized by Google

PAGES

Governor as Applied to Rice & Sargent Engine Sargent Governor. Corliss Gear Safety Devices Spring-Actuated Dashpot Disengaging Clutches Setting Valves and Eccentrics Setting the Governor Adjusting Cut-Off Rods

Single-Acting Steam Engine Westinghouse "Junior" and "Standard" Steam Engines Piston Travel Increased by Offsetting Cylinder

Nordberg Engines Nordberg Standard Corliss Valve Gear. Long-Range Cut-Off Gear High-Speed Valve Gear Valve-Motion Diagram for Nordberg Corliss Gear Positive Cam Valve Gear Effect of Superheated Steam on Engine and Valve Construction

SECTION VI.—ECCENTRICS AND SHAFT GOVERNORS FOR STEAM ENGINES 146–160

Eccentrics Classification of Eccentrics Fixed, Rotating, Swinging, and Straight-Slot Eccentrics Reversing with Eccentrics. Exercises Showing the Relations Between Eccentric Positions and Zeuner Diagrams Effect of Location of Pivot in Swinging or Curved-Slot Eccentrics Eccentric Replaced by Swinging Pivot

Shaft Governors Examples of Practical Eccentric and Flywheel Governor Construction Buckeye, Westinghouse, "Straight-Line," Erie, Fitchburg, Armington & Sims, American-Ball, and Rites Governors

Comparative Indicator Cards from Different Kinds of Eccentrics

Throttling Governors

Drafting-Table Problem No. 6—Comparison of Results from Straight-Slot and Rotating Eccentrics

SECTION VII.—PRACTICAL STEAM ENGINE VALVE GEARS 161–219

Stephenson Gear Method of Reversing Analysis of a Link Motion by the Auchincloss Method, Condensed Detail Construction. "Slip" Open and Crossed Rods Stopping Engine by Placing Mechanism in Mid Gear Relation Between Center Lines of Link Mechanism and of Engine Cylinder

To Design a Stephenson Valve Gear To Find Mid-Gear Travel. To Find Lap of Valve To Find Position of Center of Saddle Pin for Equalized Cut-Off at Half Stroke To Locate the Bell Crank or Tumbling Shaft for Equalized Cut-Off at all Points of Stroke To Find the Lead on the Forward and Return Strokes in Full Gear To Find Extreme Travel of the Link and the Slip Use of Models in Construction of Valve Gears

Links Classification and Types of Links Shifting and Stationary Links Forms of Links in General Use

Drafting-Table Problem No. 7—Comparison of Results from Open and Crossed Rods Comparison of Theoretical Indicator Cards To Find "Virtual" or Equivalent Eccentric Motion for Any Setting of a Stephenson Link Motion

Gooch, Allen, Fink, Porter-Allen, J. T. Marshall, Walschaert, Hackworth, Marshall, Joy, Baker, Stevens, Lentz, and Sulzer Valve Gears

Digitized by Google

Poppet-Valve Types
Floating or Self-Centering Valve Gears
Drafting-Table Problem No. 8—Floating Valve Gear
Steering-Gear Engines Forbes and Williamson Steering Engines.
Uniflow Steam Engine Ames-Stumpf "Una-Flow" and Skinner "Universal Unaflow" Engines Uniflow Engine with Auxiliary Exhaust Valve in the Piston

SECTION VIII.—STEAM TURBINE VALVE GEARS 2
Curtis Steam Turbine Valve Gears Hydraulic, Steam-Actuated, and Mechanical Gears Curtis Steam Turbine Governor
Westinghouse Steam Turbine Valve Gears "Direct," Hydraulic, or Oil-Operated Relay, and Steam-Operated Relay Gears
De Laval Steam Turbine Valve Gear

Digitized by Google

VALVES AND VALVE GEARS

VOLUME I.—STEAM ENGINES AND STEAM TURBINES
VOLUME II.—GASOLINE, GAS, AND OIL ENGINES

VOLUME I

General Definitions

1. The subject of valves and valve gears as treated in this book embraces all the mechanism of steam, gasoline, gas, and oil engines which is employed in automatically regulating the admission and exhaust of vapors, gases, or liquids to and from the operating cylinders.

2. An elementary valve is a specially formed piece of material which has a reciprocating, rotary, or intermittent motion and which, during this motion, either entirely or partially opens or closes a passageway at desired intervals. A valve in its practical form may be made of one piece or may be built up of two or more parts, but its fundamental object is the same as the elementary valve; and, in addition, it must also provide a practically tight steam or gas joint when in motion or when at rest.

3. A valve gear is a mechanism composed of a number of mechanical parts which connect the main shaft of the prime mover to the valve and which gives to the valve the desired motion.

4. The steam turbine is included among the steam engines. The gasoline, gas, and oil engines may be referred to, either separately or collectively, as internal combustion engines.

5. Before taking up a general classification of fundamental valve forms and of valve mechanisms the simplest kind of a reciprocating steam engine will be considered, leading up to a series of problems which are designed to give a grasp of the subject that will facilitate the further study of the fundamental groups and their practical applications.

Digitized by Google

SECTION I.—ELEMENTARY RECIPROCATING STEAM ENGINE

Names of Engine Parts

6. The elementary parts of a steam engine are diagrammatically shown in Fig. 1 as follows:

A A' is the engine cylinder, *B* the piston, *B C* the piston rod, *C D* the connecting rod, *D E* the crank, *E F* the main- or crank-shaft, *G H* the actual radius of the eccentric sheave, which is a circular disk rigidly fastened to the shaft in such a way that the two are not concentric, *H I* the eccentric strap, which surrounds and slides on the eccentric sheave, *J K* the eccentric rod whose center line always passes through the center *G* of the eccentric sheave, *K L* the valve stem, and *L M* the valve. The live steam pipe is shown at *O*, the steam chest at *P P'*, the ports at *Q* and *Q'*, the bridge walls at *R* and *R'*, the exhaust port at *S S'*, and the exhaust pipe at *T*.

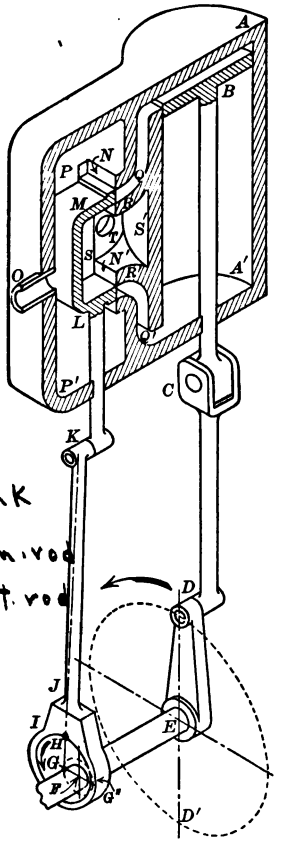

FIG. 1.—SHOWING VALVE WITH NO STEAM LAP

7. The small circle at *C* represents the pin in a crosshead, not shown, which is constrained to move back and forth between two straight parallel guides; the crank pin is at *D*, and *D D'* is the crank-pin circle; the center of the shaft is at *F* and the center of the eccentric sheave at *G*, the distance *G F* being known as the eccentric radius, or the eccentricity, and it is equal to one-half the travel of the valve when the eccentric strap is direct-connected to the valve stem. The dash-line circle *G G''* is the path of the center-point *G* of the eccentric sheave and its diameter is equal to twice the eccentricity.

Crank End, Head End, Forward Stroke, Return Stroke, Dead Center

8. Before explaining the operation of the engine some of the terms and expressions will be pointed out:

Digitized by Google

The "head end" of a cylinder is the end farthest from the crank shaft, and is shown at A. The "crank end" is the end nearest to the crank shaft, as at A'. The "forward stroke" of an engine occurs while the piston is moving toward the crank shaft; the "return stroke" while moving away from it. The engine is said to be on "dead center" when the crank, connecting rod, and piston rod are all in the one straight line, as shown in Fig. 1. There are two dead-center positions in each cycle, one being shown in Fig. 1 and the other occurring when the crank has turned 180° from the position shown. No amount of steam pressure on the piston will turn the engine when it is on either dead center.

"Running Over," "Running Under"

9. When referring to the direction of rotation of an engine it is customary to speak of it as "running over" or "running under," instead of running clockwise or counter-clockwise. The latter terms are often confusing, especially in an engine which will be running clockwise to a person standing on one side and counter-clockwise to a person standing on the other side.

10. An engine is said to be "running over" when the crank rises at the beginning of the forward stroke, or when the top of the flywheel turns away from the cylinder. It is "running under" when the crank falls at the beginning of the forward stroke, or when the top of the flywheel turns toward the cylinder. Stationary engines are usually designed to run over, while locomotives must necessarily run under, the cylinders being forward. With engines running over, the pressure between the crosshead and crosshead guide, due to the angularity of the connecting rod, comes on the lower side of the crosshead only and on the body of the engine frame directly; whereas in engines running under, the side pressure due to transmission must come on a specially designed guide part of the engine frame with the pressure upward away from the main body of the frame.

Operation of Steam Engine

11. In the working of a steam engine the parts operate as follows: Steam enters the steam chest $P\,P'$ through the pipe O, Fig. 1. The valve $M\,L$ is moved (downward, for example), and the steam passes through the steam port Q to the cylinder A, thus driving the piston B to the opposite end of the cylinder, and the crank $D\,E$ and the eccentric center G, each through 180° to the positions shown by the dotted lines $E\,D'$ and $F\,G''$. During this period of motion in the

Digitized by Google

direction of the arrow, the valve has been at the extreme downward position; it is again central, and is moving upward, and just admitting steam through the steam port Q' to the under side of the piston, which is now at the bottom of the cylinder A'. At the same instant the steam port Q is opened to the exhaust port $S\,S'$, and the exhaust steam on the upper side of the piston escapes through the exhaust pipe T.

12. Observe carefully that in order to run the engine with *this* valve the effective eccentric arm $G\,F$ must be set at 90° with the crank $D\,E$. The student can not hope to master this subject without understanding this point thoroughly, and always keeping it in mind.

Elementary Steam Valve

13. The valve $M\,L$, Fig. 1, is of the most elementary form (*i.e.*, the width of valve at seat just equals the width of port), and a study of the figure will show that it admits steam during the entire stroke. Such a valve would be extremely wasteful, for it makes no use of the expansive power of steam. In nearly all engines this elementary valve is modified so as to cut off the admission of steam after the piston has been forced through only a part of the stroke. The piston is then driven through the remainder of the stroke by the expansive power of the steam.

Steam Lap and Lap Angle

14. The modification of the elementary valve necessary to give cut-off at a fraction of the stroke consists of an addition known as the "steam lap." In Fig. 2 let the dotted line $U\,U'$ limit the edge of the *elementary* valve and $V\,V'$ the edge of the actual valve; then $U\,V$ is the steam lap. As in Fig. 1 the engine is on dead center, and the slightest movement of the valve downward will admit steam and drive the piston, assuming, of course, that the engine has sufficient momentum to pass dead center; but the valve itself, in Fig. 2, is not central (with respect to the steam ports) for the dead center position of the engine. When the lap $U\,V$ was added, the eccentric sheave was unkeyed and the effective eccentric arm moved from $F\,G$ to $F\,W$ (while the crank $D\,E$ remained stationary), so as to make the distance $G\,W$ $(= G'\,W')$ equal to the lap $V\,U$. The angle $G\,F\,W$ is called the "lap angle."

Lead, Lead Angle, Angle of Advance

15. In Fig. 2 the valve is set so as to admit exactly at the end of the stroke. In practice, steam is usually admitted to the cylinder

Digitized by Google

just before the end of the stroke. If now the eccentric is turned still further (from $F\,W$ to $F\,X$) while the engine remains on dead center, the edge V of the valve will be drawn a small distance (equal to $W'\,X'$) across the port Q. This distance is called "lead," and in small engines is about $\frac{1}{16}$ inch. The angle through which the eccentric is thus turned (angle $W\,F\,X$) is the "lead" angle. The lap angle plus the lead angle equals the "angle of advance" ($G\,F\,X$). The total angle by which the eccentric precedes the crank in simple cases equals 90° plus the angle of advance. This entire angle is termed by some as the "angle of advance," to the confusion of the subject, unfortunately. The majority, however, define angle of advance as given above, and as so defined is more convenient in the use of valve diagrams and the study of the subject generally.

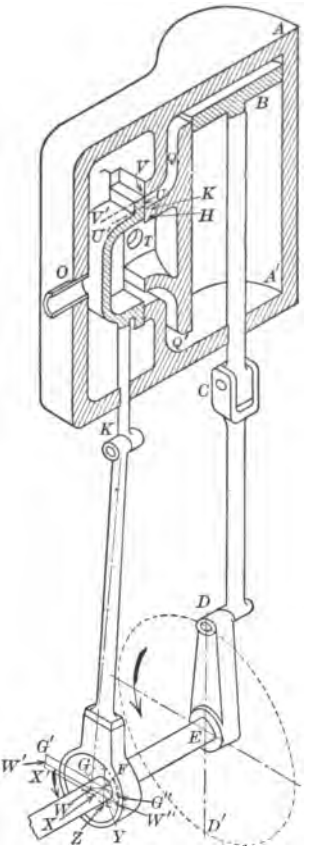

FIG. 2.—SHOWING VALVE WITH STEAM LAP

16. When the eccentric center is at W, Fig. 2, and turning in the direction of the arrow, the edge V of the valve is moving downward, and admission of steam to the cylinder begins, assuming zero lead. When the eccentric center is at W'' ($< G''\,F\,W'' = < G\,F\,W$) the edge of the valve is again over the edge of the port Q, but is now moving upward, and admission ceases. Admission, therefore, has taken place while the eccentric and main shaft have turned through the angle,

$$W\,F\,W'' = 180° - 2\,G\,F\,W \quad . \quad . \quad (1)$$

17. The half valve travel $F\,Z$ = steam lap $F\,Y$ ($= G'\,W'$) + steam-port opening $Y\,Z$. Considering for the moment a zero lead, it will be seen that the greater the lap ($V\,U = F\,Y$), the greater will be the angle of advance ($G\,F\,W$), and the smaller will be the angle $W\,F\,W''$ and the steam-port opening ($Y\,Z$). There is then a relation between the steam-port opening and the lap which is

Digitized by Google

useful in the solution of later problems. For example: What would be the amount of lap necessary to give ½ cut-off, assuming zero lead and the connecting rod to be infinite in length?

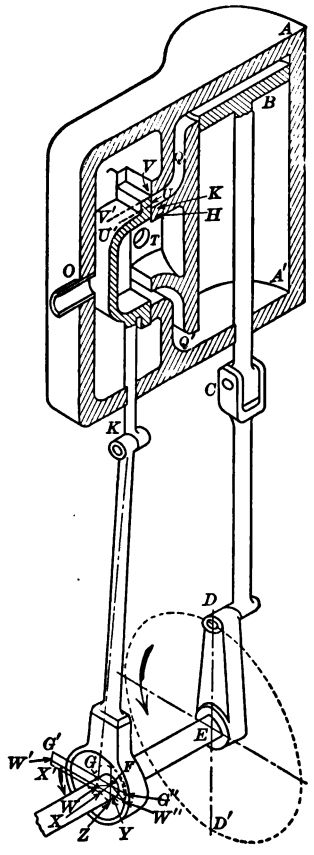

FIG. 2 (Duplicate).—SHOWING VALVE WITH STEAM LAP

First, the crank and eccentric will each have turned through 90° when cut-off takes place, and the angle $W\,F\,W''$ will be 90°, leaving the angle $G\,F\,W = 45°$ according to formula (1) on page 5. Therefore, $G'\,W' = F\,Y = \text{sine } 45° = 0.707$ and $Y\,Z = 0.293$; or, the ratio of lap to port opening for ½ cut-off under these conditions is $\frac{0.707}{0.293}$.

Exhaust Lap

18. In these notes the steam or outside lap has already been referred to, and shown in Fig. 2. Most valves have also "exhaust" or "inside lap," which is formed by adding metal to the inside of the valve so as to cover a small part of the bridge when the valve is central. See Fig. 3, in which the exhaust lap is $E\,D$. The use of the exhaust lap will appear later. A plan or top view of a plain D-valve is also shown in Fig. 3, the valve itself being shown in solid lines ($M_2\,A_1$), and the steam ports ($D_2\,B_1$ and $L_2\,K_1$), and the exhaust port ($I_2\,F_1$) in dash lines. The dimension, $D\,B$, Fig. 3, is spoken of as the width of the steam port, and $B_1\,B_2$ as the length, the area of the port being the product of these two dimensions. Similarly, $F\,I$ is width of the exhaust port while $F_1\,F_2$ is its length. The vertical sides at R and S are usually faced sides over which a rectangular yoke fits, as shown in Figs. 29 and 30, and this yoke connects with the valve stem.

Digitized by Google

Finite and "Infinite" Connecting Rods—Effect of Angularity in the Finite Rod

19. In all practical valve work on reciprocating steam engines the effect of the changing angles of the finite connecting rod during each revolution of the crank must be taken into account. Starting from dead-center position, head end, it is quite evident that when

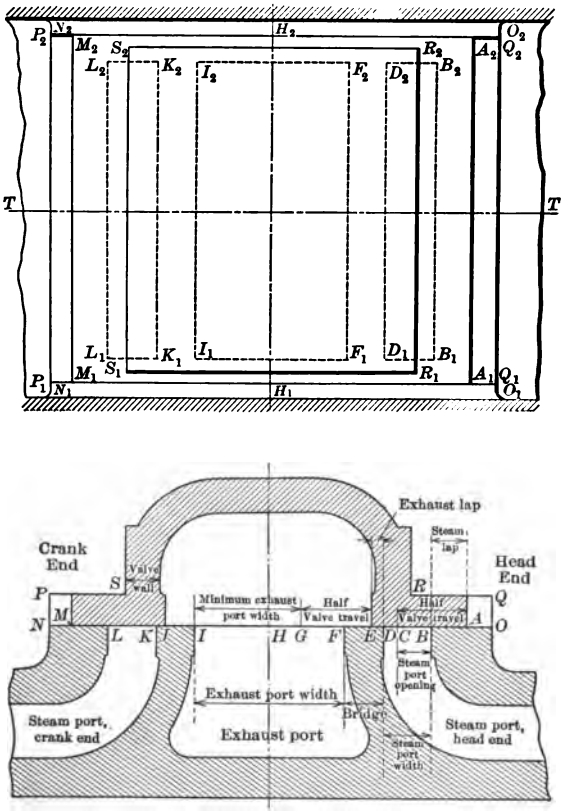

FIG. 3.—TOP VIEW AND CROSS-SECTION OF PLAIN D-VALVE

the piston is half-way through its stroke the crank can not be exactly 90° advanced; on the forward stroke it will be less than 90°, see angle *A*, Fig. 4, and on the return stroke more than 90°, see angle *R*. It will be exactly 90° with the "infinite" connecting rod, for which there is a mechanical equivalent (see Fig. 5), which, however, is seldom used. The slotted head *H K* in Fig. 5 is generally known as a Scotch yoke. The motion of the point *F* in the "infinite"

Digitized by Google

steam distribu-
the crank at
impression.
ssion, considering
s at west point and

Digitized by Google

eturning to the position illustrated, *cut-off* of the steam takes place nd *expansion* occurs. As the valve continues to move upward, *I* reaches *K*, when *release* takes place, the steam exhausting into he exhaust port *T*. The valve then continues to its highest posiion, and when *H* reaches *K* on the return the steam in the cylinder s trapped for a very short time, during which the piston continues o move upward, and *compression* takes place.

Zeuner Diagram

22. Several methods have been devised to show graphically the relative positions of the valve and crank and the steam distribution. These methods take the form of diagrams of which the most used are the Zeuner and the Bilgram. The others are the Reuleaux diagram, the valve ellipse, and the sinusoidal diagram. Each of the above diagrams has some distinguishing characteristic that gives it some special advantage over the others in certain combinations of data, or in certain analyses, and one may investigate the entire subject by holding to any one of them. The one selected for general use in this book is the Zeuner diagram, although solutions of actual problems are given by both the Bilgram and Reuleaux diagrams. The Zeuner diagram will now be taken up for immediate application and the remaining diagrams will be considered in another section. Knowing, then, the dimensions of the valve and the valve seat, the actual opening of the port for any crank position, either for entering or exhaust steam, is seen at a glance.

23. Briefly, the Zeuner diagram shows how far the valve is from its central position for any crank phase, and it shows it on the crank line itself.

24. In Fig. 7, let *A B* represent any position of the crank. Then if an angle of advance of 30° be assigned, the eccentric will be 120° in advance of the crank, or in the position *A C*.

When it is in the position *A C*, Fig. 7, the valve must be off center a distance $C L = A D$. But $A D = A E$ since the diameter of the circle *A E F* equals the radius of the eccentric circle, and the right-angle triangles *A E F* and *A D C* are equal.

The radial distance *A E* then represents the amount the valve is off center, and if there were no lap, as in Fig. 1, it would be the amount of port opening with the crank at *A B*. (Fig. 7, it will be understood, is on a much larger scale than Fig. 1.)

Remembering that the eccentric is 120° in advance of the crank, *C* together with the circle *A E F*, may be turned back this amount,

Digitized by Google

connecting rod, Fig. 5, is harmonic, or exactly equivalent to that of the point C which is the projection of B; whereas in Fig. 6 the point F moves faster than C while B is moving from D to L, approximately, and slower while B is moving from L to M.

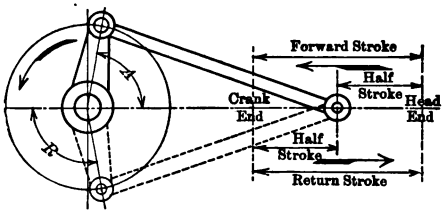

FIG. 4.—SHOWING EFFECT OF ANGULARITY OF CONNECTING ROD

20. The length of the connecting rod varies in practice from four to eight times the length of the crank for steam-engine work. In this course it will always be taken as five times, unless otherwise specified.

The effect of the angularity of the *eccentric rod* is generally so very small that it is inappreciable, and is therefore neglected. This becomes evident when it is considered that the length of the eccentric rod is twenty to thirty times the eccentric radius.

21. In the work of valve design it is necessary to adopt some

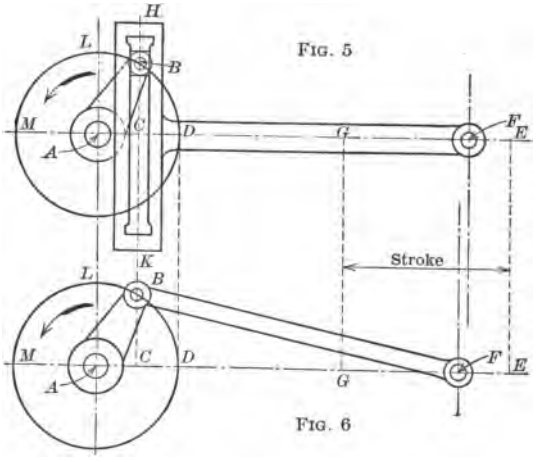

FIG. 5

FIG. 6

FIG. 5.—INFINITE CONNECTING ROD
FIG. 6.—FINITE CONNECTING ROD

graphical method which will show at a glance the steam distribution at any instant, and also the several positions of the crank at the points of admission, cut-off, release, and compression.

In Fig. 2 the valve is shown in position for *admission*, considering that it is moving downward. After traveling to its lowest point and

Digitized by Google

returning to the position illustrated, *cut-off* of the steam takes place and *expansion* occurs. As the valve continues to move upward, H reaches K, when *release* takes place, the steam exhausting into the exhaust port T. The valve then continues to its highest position, and when H reaches K on the return the steam in the cylinder is trapped for a very short time, during which the piston continues to move upward, and *compression* takes place.

Zeuner Diagram

22. Several methods have been devised to show graphically the relative positions of the valve and crank and the steam distribution. These methods take the form of diagrams of which the most used are the Zeuner and the Bilgram. The others are the Reuleaux diagram, the valve ellipse, and the sinusoidal diagram. Each of the above diagrams has some distinguishing characteristic that gives it some special advantage over the others in certain combinations of data, or in certain analyses, and one may investigate the entire subject by holding to any one of them. The one selected for general use in this book is the Zeuner diagram, although solutions of actual problems are given by both the Bilgram and Reuleaux diagrams. The Zeuner diagram will now be taken up for immediate application and the remaining diagrams will be considered in another section. Knowing, then, the dimensions of the valve and the valve seat, the actual opening of the port for any crank position, either for entering or exhaust steam, is seen at a glance.

23. Briefly, the Zeuner diagram shows how far the valve is from its central position for any crank phase, and it shows it on the crank line itself.

24. In Fig. 7, let $A\ B$ represent any position of the crank. Then if an angle of advance of 30° be assigned, the eccentric will be 120° in advance of the crank, or in the position $A\ C$.

When it is in the position $A\ C$, Fig. 7, the valve must be off center a distance $C\ L = A\ D$. But $A\ D = A\ E$ since the diameter of the circle $A\ E\ F$ equals the radius of the eccentric circle, and the right-angle triangles $A\ E\ F$ and $A\ D\ C$ are equal.

The radial distance $A\ E$ then represents the amount the valve is off center, and if there were no lap, as in Fig. 1, it would be the amount of port opening with the crank at $A\ B$. (Fig. 7, it will be understood, is on a much larger scale than Fig. 1.)

Remembering that the eccentric is 120° in advance of the crank, $A\ C$ together with the circle $A\ E\ F$, may be turned back this amount,

Digitized by Google

when $A\ C$ will coincide with $A\ B$, and E will fall at G and the circle $A\ E\ F$ at $A\ G\ H$. The angle $F\ A\ H$, then, is 120°, and taking from it the right angle $F\ A\ K$ there is left $K\ A\ H = 30°$, which is the angle of advance. $A\ G$, *on the crank-line position*, now measures the amount the valve is off center for that crank position. The circle $A\ G\ H$ when laid off with the proper angle of advance, may be called specifically the "Zeuner circle," for, no matter where the crank position is drawn, the part lying within this circle always measures the amount the valve is off center.

25. That $A\ G$ is equal to $C\ L$, Fig. 7, and therefore shows the

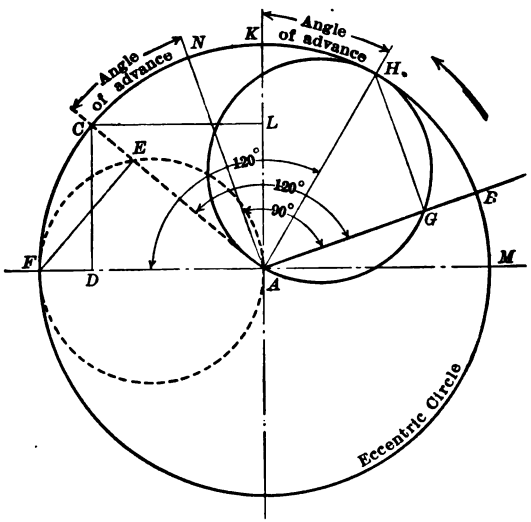

FIG. 7.—SHOWING DEVELOPMENT OF ZEUNER DIAGRAM

amount the valve is off center may also be shown briefly as follows:

$< N\ A\ K = < M\ A\ B$, lines respectively perpendicular.

$< C\ A\ N = < K\ A\ H$, by construction.

$\therefore 90° - (< N\ A\ K + < C\ A\ N) = 90°—(< M\ A\ B + < K\ A\ H)$ and $< C\ A\ F = < H\ A\ B$.

$A\ H = A\ C$ by construction.

$C\ D$ and $H\ G$ are drawn from the points C and H respectively, perpendicular to the opposite sides of the angles $C\ A\ F$ and $H\ A\ B$.

$\therefore$ the triangles $D\ A\ C$ and $G\ A\ H$ are equal and the sides $D\ A$ and $A\ G$ are equal. But $D\ A = C\ L$.

$\therefore A\ G = C\ L$. Q.E.D.

26. In using the Zeuner diagram it must be kept constantly in

Digitized by Google

mind that the angle of advance is laid off in the opposite direction from that in which the engine is turning when the eccentric is directly connected to the valve stem.

Application of the Zeuner Diagram

27. Fig. 8 is a practical application of the Zeuner diagram showing the events for the head-end steam port. The "throw" of the eccentric $A\ H$, the angle of advance $K\ A\ H$, and the steam and exhaust laps $A\ F$ and $A\ L$, are assumed. When the crank is at $A\ N$ the valve is off center the distance $A\ D$. But $A\ D$, equal to $A\ F$, is the assumed steam lap, or the distance the valve has to travel from its central position before it begins to open the steam port. Therefore, the Zeuner diagram shows that steam begins to enter the cylinder when the crank is at $A\ N$. At the end of the stroke, or on the dead-center position, when the crank is at $A\ C$, the valve is off center the distance $A\ B$, and the steam port is open the amount of the lead $= E\ B$. With the crank at $A\ H$ the valve is at its extreme left-hand position, and the steam port is open the maximum amount equal to $F\ H$. When the crank arrives at $A\ V\ P$ the steam-port opening is zero, and cut-off takes place. Steam has been admitted then while the crank has been turning from $A\ N$ to $A\ P$.

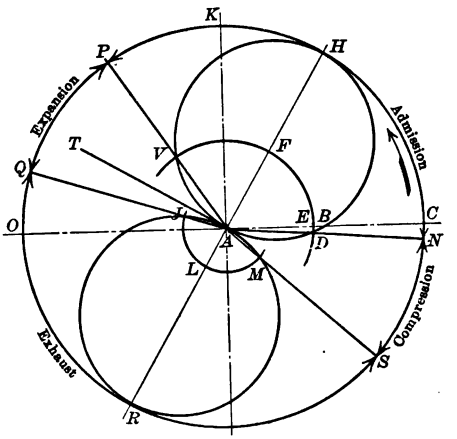

FIG. 8.—APPLICATION OF THE ZEUNER DIAGRAM TO THE EVENTS OF THE HEAD-END STEAM PORT

When the crank reaches $A\ T$ (tangent to the Zeuner circles) the valve is central, and if there were no exhaust lap, exhaust would begin. But in Fig. 8 an exhaust lap equal to $A\ L$ has been assumed; the valve must therefore move the distance $A\ L$ or $A\ J$, and the crank reach the position $A\ J\ Q$ before exhaust begins. The exhaust opening continues to increase until it reaches its maximum, $L\ R$, at $A\ R$, and then decreases until it closes altogether at $A\ S$. The unexhausted steam at that instant is then trapped in the cylinder, and as the piston nears the end of the return stroke, the steam must be compressed until the crank reaches $A\ N$, when admission again takes place, and the cycle is completed.

Digitized by Google

The Zeuner diagram showing the events for the crank-end port may have the steam-lap arc *D F V* continued to intersect the circle *A J R M*, and the exhaust-lap arc *J L M* continued to intersect the circle *A D H V;* and crank-end admission would begin just before the crank reached *A O*.

Principal Phases of a Steam-Engine Cycle

28. The four principal phases of the stroke are called "Admission," (*A N*), "Cut-off" (*A P*), "Release" (*A Q*), and "Exhaust Closure" (*A S*).

Observe, and commit to memory the fact that $\left\{\begin{matrix}\text{steam or}\\\text{outside}\end{matrix}\right\}$ lap controls admission and cut-off, and that exhaust lap controls release and exhaust closure.

Positive and Negative Exhaust Laps

29. The exhaust lap shown by *A J* in Fig. 8 is termed positive exhaust lap because it represents metal added to the elementary valve, and because the valve has to travel an additional amount beyond its central position to open the port to exhaust steam. But it frequently happens, in order to obtain a more desirable steam distribution to fit special conditions, that the exhaust lap is decreased, in which case it may be zero when the arc *J M* would reduce to the point *A*, the valve would open to exhaust just as it reached its central position, and *A R* would be the maximum exhaust-port opening; or, the exhaust lap may be negative, in which case it represents metal cut away from the inside edge of the elementary valve, and the valve opens the port to exhaust before it reaches its central position, as shown in Fig. 9.

30. The negative exhaust lap in Fig. 9 is *A L;* exhaust begins when the crank is at *A Q*, and the valve is on center when the crank is at *A T*. The maximum port opening to exhaust would be *R A* + *A L*, providing the steam port were that wide. When the distance *R L* becomes greater than the steam-port width the engine is said to have "full exhaust opening." The intercept on the dead-center crank position *A O* between the exhaust lap and Zeuner circles, *W G* in Fig. 9, is sometimes called the "exhaust lead." A valve having negative exhaust lap equal to *A L*, Fig. 9, is illustrated in Fig. 10, to ½ size, both figures having corresponding letters where possible. The negative exhaust lap is shown at *A L*.

Digitized by Google

Exercise Drills in the Use of the Zeuner Diagram

31. A valve diagram is of such great importance in analyzing steam distribution for a valve that it should be thoroughly understood at the start. In order to acquire such understanding, the student should carefully study the exercise problems, paragraphs 32, 33, and 34, which are about to be explained, and also construct for

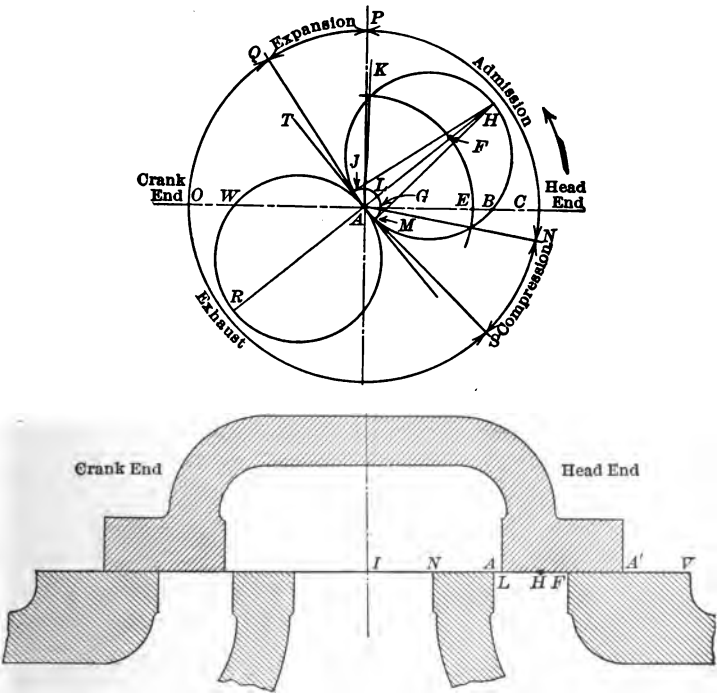

FIG. 9.—SHOWING ZEUNER DIAGRAM FOR VALVE IN FIG. 10
FIG. 10.—SHOWING VALVE FOR ZEUNER DIAGRAM IN FIG. 9. DRAWN TO DOUBLE SCALE

himself the original problems in paragraphs 35, 36, and 37. Before doing so, however, attention is called to the fact that whenever the *position of the crank is given directly* in any set of valve data, it is customary to lay off the angle of advance to the right of the vertical line of the diagram, as at *K A H*, Fig. 8, and as a result, to draw the diametral line for the Zeuner circles, so that it inclines from an upper right to a lower left position, as at *H R*, in Fig. 8. With the Zeuner diagram so drawn, correct results will always be obtained in showing the amount the valve is off center, the port opening, etc., for any assigned crank position, independently of the direction of

Digitized by Google

turning of the crank of the engine itself and independently of the relative positions of the shaft and engine cylinder. But when the data give piston positions instead of crank positions, the cylinder or crosshead, the connecting rod and the crank must be shown in the drawing in connection with the Zeuner diagram, and it is then more consistent and better to lay off the angle of advance and the diametral line of the Zeuner circles in their proper relative positions.

For example, let it be required to find the distance that the valve is off center when the piston is, say, .08 from the head end of the cylinder, or, what is the same thing, when the crosshead is at T, Fig. 11, and the engine running "over." Then, assuming connecting-

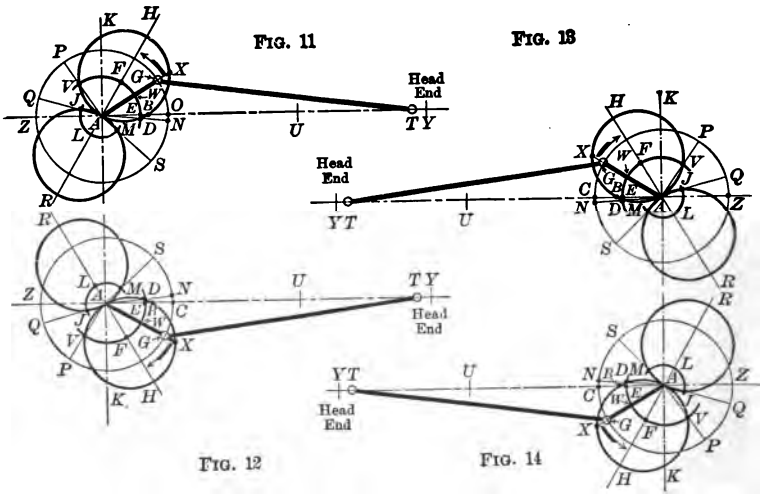

Figs. 11 to 14.—Showing Zeuner Circles in Each of the Four Quadrants

rod and crank lengths, the crank pin is found to be at G, and moving in the direction shown by the arrow. In drawing the Zeuner diagram, then, the angle will be laid off against the direction of motion as at $K\ A\ H$, and the valve will be found to be off center by the distance $A\ X$, and the port will be open the amount $W\ X$ for the assigned piston position at .08 from the head end of the cylinder. Similarly, with all other conditions the same, excepting that the engine is running "under," the angle of advance must be laid off, as at $K\ A\ H$, Fig. 12, to be consistent and the diametral line $H\ R$, of the Zeuner circles, will incline from a lower right to an upper left position. Again, in Figs. 13 and 14, the relative positions of the engine cylinder are different, and the directions of turning differ in the two cases, yet

Digitized by Google

the distance $A\ X$ that the valve is off center and the amount $W\ X$ that the port is open for the assigned piston position is the same in all four figures. This shows the point first brought out in this connection, namely, that if the crank position, instead of the piston position, is known, the Zeuner diagram may be drawn with its angle of advance laid off in any one of the four principal quadrants, and the correct results will be obtained. In this work, the angle of advance will always be laid off in the upper right-hand quadrant, as in Fig. 11, when crank positions only are required or are given in the data.

32. Given: Eccentricity, crank position at cut-off, angle of advance, and compression,

Find: Steam lap, exhaust lap, crank positions at admission and release, lead, exhaust lead, and greatest steam and exhaust port openings.

The solution of this problem is shown in Fig. 15, the data being in dash-line construction, and the rest of the work in solid-line con-

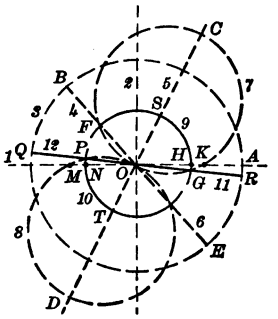

FIG. 15.—EXERCISE PROBLEM

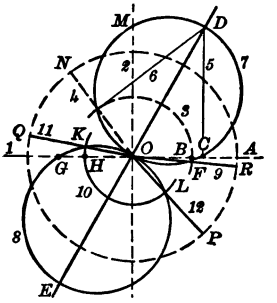

FIG. 16.—EXERCISE PROBLEM

struction. The order of drawing all the lines is shown by the numerals on each. The steam lap is $O\ S$; exhaust lap, $O\ T$; crank position at admission, $O\ R$; and at release, $O\ Q$; lead, $H\ K$; exhaust lead, $M\ N$; greatest steam opening, $S\ C$; greatest exhaust port opening, $T\ D$.

33. Given: Steam lap, lead, crank position at cut-off, and exhaust lead.

Find: Valve travel, angle of advance, exhaust lap, and crank positions at admission, release, and compression.

The data are given in Fig. 16 in dash lines and by the distances $B\ C$ and $G\ H$. The results are: $E\ D$ = valve travel; $M\ O\ D$ = angle of advance; $O\ K$ = exhaust lap; $O\ R$, $O\ Q$, and $O\ P$ = crank positions at admission, release, and compression, respectively.

Digitized by Google

34. Given: Cut-off, lead, and steam-port opening.

Find: Lap, valve travel, and angle of advance.

In Fig. 17, draw given crank cut-off position $O\,T$, and on $O\,T$ extended lay off $O\,A$ = lead to enlarged scale. Make $A\,B$ = given steam opening to same enlarged scale. Then draw $B\,U$ parallel to line of stroke, and make $B\,C = B\,A$. Draw $O\,C$ and on it lay off $O\,D = O\,A$, and draw horizontal line $D\,F$. With radius $O\,E$ (where $U\,B$ crosses vertical center line) draw circular arc $E\,V$, and lay off arc $F\,H$ = arc $E\,G$. Draw line $H\,W$, which will contain the diameter of the Zeuner circle and $Y\,O\,W$ will be the angle of advance. Take any point as J as center for a trial Zeuner circle. This gives a port opening of $Z\,K$, and lead of $L\,M$, which are too small each in the same proportion. Since $Z\,K$ is the trial port opening and $A\,B$ the desired opening, draw $K\,Q$ in any direction, lay off $K\,N = A\,B$, draw $Z\,N$, and $O\,I$ parallel to $Z\,N$. Then $I\,N$ = radius of desired lap circle, and $K\,I = W\,O$ = diameter of the Zeuner circle, or ½ valve travel. $P\,X$ = lead = $O\,A$. The proof for this construction is given in Spangler's "Valve Gears," p. 22.

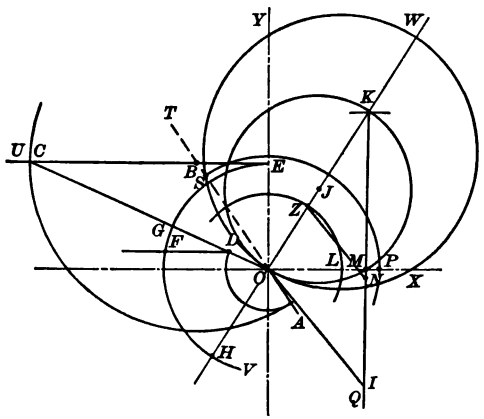

FIG. 17.—EXERCISE PROBLEM

The data for this problem are those usually assigned in practical work. The involved graphical solution here given is not easily remembered, and, therefore, not generally used, the simple method given in connection with drafting-table problem No. 1, p. 23, being the one usually employed since it may be developed from elementary knowledge, without reference to any books or notes. An analytical solution by Mr. G. A. Pfeiffer, M.E. (Stevens '10), using the formula,

$$\text{Steam lap} = \frac{2b - a + \sqrt{2\,b\,(b-a)\,(1+d)}}{1-d} - b$$

where a = lead, b = steam-port opening, both in inches, and d = cosine of angle measured between the initial dead-center and cut-off crank positions, may also be used. It is of special advantage in cases where the lead is large relatively to port opening.

Digitized by Google

Original Exercise Problems

35. Given: Valve travel, steam lap, zero lead, and negative exhaust lap.

Find: Angle of advance, crank positions at admission, cut-off, release and compression, also maximum steam- and exhaust-port openings.

36. Given: Crank positions for admission and cut-off on head end, and for admission on crank end; also, valve travel, and positive exhaust lap on head end, and negative exhaust lap on crank end.

Find: Steam lap for both ends, crank positions at release, and compression for both ends, cut-off crank end, lead for both ends.

37. Given: Angle of advance, valve travel, negative lead, and crank position at compression.

Find: Steam and exhaust laps, and crank positions at admission, cut-off, and release.

Steam Pipes, Steam Ports, and Steam-Port Opening

Formula for Calculating Sizes of Ports and Pipes

38. The areas of the steam pipes, ports, and port openings depend on the size of the cylinder and the speed of the piston.

Let L be the length of the piston stroke, in feet,

D the diameter of the cylinder bore, in inches,

N the number of revolutions per minute,

V the velocity of the steam, in feet per minute,

A the area of the steam port, steam pipe, or steam-port opening, in square inches,

a the area of the cross-section of the cylinder, in square inches.

The volume swept through by the piston per minute will be $N \times 2L \times 12 \times \frac{\pi D^2}{4}$ cubic inches.

The velocity V of the steam through the port opening, multiplied by the area A, must be equal to the above expression, assuming that the piston is moving with its average velocity. From this it follows that

$$12\,V\,A = 24\,N\,L\,\frac{\pi D^2}{4}$$

By substituting a for $\frac{\pi D^2}{4}$, and by canceling, the equation re-

Digitized by Google

duces to the following form in which it is generally used in practice,

$$A = \frac{2\,L\,a\,N}{V} \quad . \quad . \quad . \quad . \quad . \quad . \quad (2)$$

After the desired area A is computed, a length must be assumed in the case of rectangular steam ports and steam-port openings, in order to determine the breadth. In plain slide-valve engines the length of the port varies in practice from $\frac{5}{8}$ to $\frac{7}{8}$ of the diameter of the cylinder.

39. The above formula is also used for determining the area of live-steam and exhaust-steam pipes, as well as for steam-port areas, by simply giving to V a suitable value in each case. Good average practice in a large number of engines allows a velocity of 6,000 to 8,000 feet per minute for the supply steam pipe, and for the steam-port opening. A velocity of 4,000 to 6,000 feet per minute is allowed for the exhaust through the steam port.

Distinction Between Steam-Port Width and Steam-Port Opening

40. The distinction between steam-port width and steam-port opening should be carefully noted. It is as follows:

Since only one port leads to one end of the cylinder in the simple engine, it is evident that the supply of live steam must go in and the exhaust steam come out of the same port. The allowance usually made for the velocity of the exhaust steam regulates the area of the steam port which must be entirely uncovered by a sufficient travel of the valve when opening to the exhaust port. When the valve opens the steam port for the admission of live steam, it is evident that the entire area of the steam port need not be uncovered, on account of the live steam flowing at a faster rate than the exhaust. The amount that is uncovered to live steam is called the "steam-port opening." This opening is usually less than the width of the port, but in some engines other considerations control the design, and the edge of the steam lap of the valve may not only cross the entire width of the port, but also traverse a small part of the bridge.

Overtravel

41. The amount that the cut-off edge of the valve travels beyond the live-steam edge of the bridge is termed by some as "overtravel"; whereas it appears more logical to term that travel of the valve beyond the point necessary to give the full calculated steam-port opening as the overtravel, and this word will be used in the latter

Digitized by Google

sense throughout this book. As an illustration, refer to the Zeuner diagram, Fig. 18. There it will be assumed that it has been expedient to make the half valve travel equal to $A\ R$, notwithstanding that the steam-port opening has been calculated to be only $T\ L$; $L\ R$, then, becomes the overtravel. This overtravel would be represented on the valve seat itself by the amount A travels beyond C in Fig. 3, p. 7. In an engine already built the point C, of course, would not be in evidence, but in order to take intelligent action with respect to the valve or valve gear, it would be necessary to make computations as to port opening, etc., thus locating C, after which the overtravel could be readily determined. If the overtravel should be great enough to come too close to the exhaust side of the bridge, alterations must be made either in the valve travel or the bridge thickness; this case will be taken up in connection with drafting-table problem No. 1, p. 23.

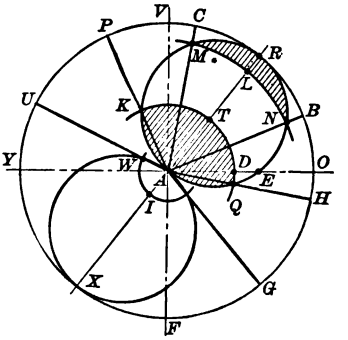

FIG. 18.—SHOWING OVERTRAVEL

Actual and Average Velocity of Flow of Steam Through Ports

42. In building up formula (2), it will be observed that the quantity of steam per minute was based on an assumption that steam entered the cylinder during the entire stroke. Inasmuch as engines cut off anywhere from ¼ to ¾ stroke, as a rule, this may seem a needlessly large assumption, but it must be remembered that it is the rate at which steam is required at a given instant that counts, and not the period during which it is required. Owing to the varying velocity of the piston, the rate of flow of 6,000 feet per minute here provided is only an *average rate*, and means nothing so far as actual rate of flow through the ports at any given instant is concerned. It is purely an empirical value based on practical experience.

43. To find the actual velocity of the steam through the ports for any given engine, it would be necessary to find the piston velocity and the port opening at successive intervals from which the actual rate of flow through the port at these phases could be determined, the area of the piston being known. If these values were plotted as ordinates, a curve would be obtained in which the maximum

Digitized by Google

ordinate would give the maximum rate of flow of steam through the ports.

44. In the ordinary engine an approximation to the maximum steam velocity through the ports may be obtained by considering that the full steam-port-opening area is uncovered at the instant that the piston has its maximum velocity. The maximum piston velocity is equal, approximately, to the crank-pin velocity. Therefore, the approximate maximum steam velocity through the port opening equals

$$V_1 = \frac{2\,\pi\,R\,N \times \frac{1}{4}\,\pi\,D^2}{A}$$

The average velocity equals

$$V = \frac{2\,L\,N \times \frac{1}{4}\,\pi\,D^2}{A}$$

Therefore the ratio of approximate maximum velocity to the average velocity ordinarily used in computations for engine design equals

$$\frac{V_1}{V} = \frac{2\,\pi\,R\,N \times \frac{1}{4}\,\pi\,D^2}{A} \times \frac{A}{2\,L\,N \times \frac{1}{4}\,\pi\,D^2} = \frac{\pi\,R}{L}$$

But since $L = 2\,R$,

$$\frac{V_1}{V} = \frac{\pi}{2}$$

The average steam velocity V, in the formula on p. 18, as allowed by builders of different types and sizes of engines, varies widely, and instead of the values of 6,000 to 8,000 feet per minute already given, 10,000 and even more is sometimes used.

Note-Book Problems

The problems here given should be carefully worked out in a large note book or on large pad paper. They are preliminary to the drafting-table problems which follow.

45. *Prob. 1.*—Construct on large scale a valve and valve seat with assumed values for the live-steam and exhaust-steam laps, the bridge, the exhaust port, the steam ports, the maximum steam-port opening, and the half valve travel, all plainly marked.

46. *Prob. 2.*—Make orthographic drawing on enlarged scale of the lower part of Fig. 2 of this book, assuming the angles $G\,F\,W$ and $W\,F\,X$, the eccentric center at X, and engine on dead center. In

Digitized by Google

determining the angle made by the center line of eccentric rod with the center line of the engine, the eccentric-rod length may be taken equal to 20 × eccentric radius. Show only a small part of the eccentric-rod length so that an enlarged scale may be used for the drawing. Mark plainly by use of reference letters:

(1) Lap angle. (3) Angle of advance. (5) Lead.
(2) Lead angle. (4) Steam lap. (6) Port opening.
(7) Half valve travel.

(8) Angle through which crank turns while the piston is moving from end of stroke to point of cut-off.

(9) Angle through which the crank turns while steam is being admitted.

47. *Prob. 3.*—Construct, to full-size scale, an eccentric sheave, eccentric strap, and part of eccentric rod that will give a 2-inch valve travel when mounted on a 2½-inch shaft. Show correct inclination of eccentric rod.

48. *Prob. 4.*—To show the variable motion of the piston during forward and return strokes caused by the angularity of the connecting rod when the center line of the stroke passes through the axis of the shaft.

Draw to scale a crank, a connecting rod, and the crosshead travel, making the connecting rod equal to 4 crank lengths. Assume the crank length.

From the drawing, fill in the blank spaces in the following items:

(1) When the piston is at ½ the *forward stroke* the crank has turned through ..... degrees approximately.

(2) When the piston is at ½ the *return stroke* the crank has turned through ..... degrees approximately.

(3) When the crank has turned through 90° on the *forward stroke* the piston is at ..... per cent of its stroke approximately.

(4) When the crank has turned through 90° on the *return stroke* the piston is at ..... per cent of its stroke approximately.

(5) The maximum angle of the connecting rod is ..... degrees approximately.

49. *Prob. 5.*—To show the variable motion of the piston during forward and return strokes caused by the angularity of the connecting rod when the center line of stroke is tangent to the crank-pin circle.

Make drawings to scale, using same dimensions for crank and connecting rod as in Prob. 4, and fill in the blank spaces in the following items:

Digitized by Google

(1) The piston travel = ... × crank length.

(2) The crank travel = ... degrees approximately on the *forward stroke.*

(3) The crank travel = ... degrees approximately on the *return stroke.*

(4) The piston pressure is transmitted without angularity of the connecting rod and with maximum crank leverage when the piston is at ..... per cent of its forward stroke. This, together with the fact that the angularity of the rod varies from a minimum to a maximum of ..... to ..... degrees during the return stroke makes it useful only for single-acting engines.

50. *Prob.* 6.—Determine the ratio of lap to port opening for 0.7 cut-off and zero lead;

(1) For connecting rod = 5 crank lengths,

(2) For infinite connecting rod.

In drawing make separate crank and eccentric circles for each case.

51. *Prob.* 7.—Determine the ratio of lap to port opening for 0.4 cut-off and zero lead, for a connecting rod equal to 4 crank lengths.

52. *Prob.* 8.—Find the maximum rate of flow of live steam through the port opening of an engine having 10 inches bore, 18 inches stroke, and 250 r.p.m., in which the port opening has been designed for an average rate of flow of live steam of 6,000 feet per minute.

53. *Prob.* 9.—Given: valve travel = 3 inches, angle of advance = zero, steam lap = ½ inch, exhaust lap = ¼ inch, steam-port width = 1½ inches, bridge ¾ inch, and exhaust port = 2½ inches. Find the crank positions for admission, cut-off, release, and compression. Construct the valve seat, and the valve in its proper position for the beginning of the stroke. Indicate the maximum steam-port opening, exhaust-port opening and lead, both on Zeuner diagram and valve seat. Then assume any crank position and dot the corresponding position of valve on the valve seat and mark the port opening for that position on both the Zeuner diagram and valve seat.

54. *Prob.* 10.—Let the data and requirements be the same as the previous problem, only changing the angle of advance to 30°. Take the assumed crank position in the same place as in Prob. 9.

55. *Prob.* 11.—Show effect of changing conditions as indicated in the first column of the following table, on the time when the principal events of the stroke occur, based on a study of Probs. 9

Digitized by Google

and 10. Fill out the following table by using in each case one of the following words, Earlier, Later, or Same:

	Admission	Cut-off	Release	Exhaust closure
Increase in Angle of Advance				
Increase in Valve Travel				
Increase in Steam Lap				
Increase in Exhaust Lap				

Drafting-Table Problem No. 1.—Plain D-Valve

56. Design a slide valve for an engine having 9 inches bore and 16 inches stroke, running at 150 revolutions per minute. Cut-off at 75 per cent stroke head end; release at 95 per cent stroke head end; lead, $\frac{1}{16}$ inch head end; average velocity of live steam through ports, 100 feet per second; average velocity of exhaust steam through ports, $66\frac{2}{3}$ feet per second; length of connecting rod, 4 times the crank. Make steam lap on crank end equal to that on head end; equalize the compression.

Construction of Zeuner Diagram

57. Calculate the area of the maximum *live-steam port opening* for the given live-steam velocity. Make the length of the port 0.8 of the bore, and determine the width of the port opening.

58. By means of the Zeuner diagram the necessary steam lap, exhaust lap, the valve travel, and the angle of advance may be found as follows:

On the horizontal line $Y\,Z$, Fig. 19, set off $A\,O$ equal to the crank length, $O\,N$ equal the length of the connecting rod, and $N\,M$ equal to the stroke, to the largest scale that the drawing paper will accommodate. In doing this, consider $M\,N$ the crosshead travel instead of the piston travel. $O\,P\,Y$ is then the crank-pin circle, and A the center of the crank shaft.

Digitized by Google

Find the position $A\ P$ of the crank for the assigned cut-off. A trial steam lap for the head end of the valve which will give this cut-off approximately should then be found by means of the relation existing between port opening and steam lap as explained in paragraphs 16 and 17.

Inasmuch as a definite amount of lead is assigned in this problem the ratio of lap to port opening, just referred to, will not be exact in this case. It will, however, be approximately correct, and will serve as a guide in obtaining the exact lap as follows: At the intersection of the trial lap circle $A\ F$, Fig. 19, with the cut-off crank line $A\ P$,

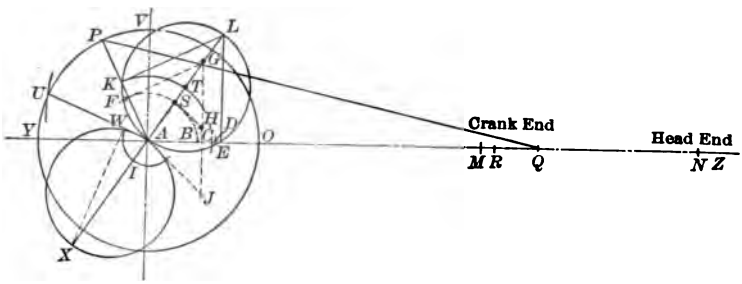

FIG. 19.—SHOWING VALVE DIAGRAM LAYOUT FOR ASSIGNED DATA

draw a perpendicular $F\ G$. From B, where the trial lap circle intersects the engine center line, lay off distance $B\ C$ equal to the lead on the scale adopted for the trial lap circle. At C erect a vertical line until it meets $F\ G$. Then if the radial distance $S\ G$ equals the calculated width of the port opening according to the adopted scale, the assumed lap is the correct one. It is not to be supposed that one will assume the correct lap circle the first time, in which case proceed as follows:

On the line $G\ C$ lay off $G\ H$ equal to the calculated width of the port opening, and draw $S\ H$. From A, draw $A\ J$ parallel to $S\ H$ until it meets $G\ C$ produced at J. Then $H\ J$ will be approximately the length of the required lap, and may be used for the radius of the new lap circle $K\ T\ D$. Find point L in the same manner that G was found. Then $T\ L$ should equal the calculated width of the steam-port opening within $\frac{1}{64}$ inch. If it does not, a third proportion based on the second must be made.

Then $A\ T$ is the required lap for the given cut-off, $T\ L$ the maximum width of the steam-port opening, $A\ L$ the half travel of the valve, and $V\ A\ L$ the angle of advance. To find the exhaust lap that will give release at the assigned time, locate the crank position $A\ U$

Digitized by Google

for the crosshead at R ($N\,R$ = the given percentage of stroke). $A\,U$ intersects the Zeuner circle $A\,X$ at W, and $A\,W$ is, therefore, the required exhaust lap. The point W is determined exactly by drawing from X a perpendicular to $A\,U$. If the crank position $A\,U$ had intersected the Zeuner circle $A\,L$, the exhaust lap would have been negative; that is, with the valve in its central position the steam port would be partly open and in communication with the exhaust port.

Layout of Valve and Valve Seat

59. Having all necessary data, the head end of the valve and the ports may now be laid down full size as follows: Draw the valve-seat line $Y\,Z$, Fig. 20. When completed the valve is to be shown in its central position.

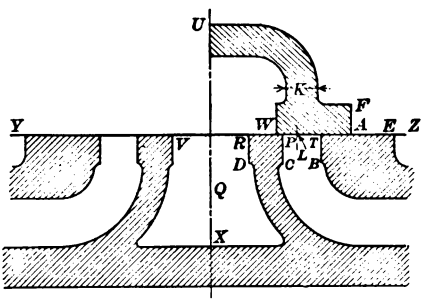

FIG. 20.—SHOWING VALVE LAYOUT FOR ASSIGNED DATA

The drawing of the sectional view of the valve and ports (Fig. 20) is to be made full size. (This makes three separate scales to be used in this problem, namely, the crank scale, the Zeuner scale, and the valve scale.) Therefore from any convenient point, A on $Y\,Z$, Fig. 20, lay off $A\,T = A\,T$ of Fig. 19 equal to the steam lap. Calculate the necessary width of the *steam port* for the steam to exhaust at the assigned exhaust-steam velocity and lay it off at $T\,P$. Make $P\,W$ equal to the exhaust lap as found at $A\,W$ in Fig. 19. $T\,L$ is the maximum *steam-port opening*, and equals $T\,L$, Fig. 19. $A\,L$, Fig. 20, then equals the eccentricity, or one-half the travel of the valve.

Formula for Minimum Width of Bridge

60. The width of the bridge $P\,R$ should in all cases be at least equal to the thickness of the cylinder wall, in order to secure a reliable casting. For an engine of this size, this thickness may be $\frac{5}{8}$ inch, and should be so taken unless the following standard rule gives a larger value:

$$\left.\begin{matrix}\text{Minimum}\\ \text{width of}\\ \text{bridge}\end{matrix}\right\} = \left\{\begin{matrix}\text{Width}\\ \text{of port}\\ \text{opening}\end{matrix}\right\} + \text{Overtravel} + \tfrac{1}{4}'' - \left\{\begin{matrix}\text{Width}\\ \text{of steam}\\ \text{port.}\end{matrix}\right.$$

Digitized by Google

This formula will affect the width of bridge only when the edge A of the valve comes within ¼ inch of the edge R of the bridge, and applies principally in repair work. The amount that A travels beyond L is the overtravel.

Formula for Width of Exhaust Port

61. $R\ V$ is the width of the exhaust port, and must be so taken that when the exhaust lap of the valve is in its extreme left-hand position there will still be a width left at least equal to the width of the steam port. $R\ V$ may thus be determined graphically, or calculated by the formula given below.

In using this formula it must be kept in mind that the exhaust lap may be different on the two ends of the valve, according to the conditions of the problem, and that therefore the size of both exhaust laps must be known, and the greater value used in the formula. Inasmuch as the exhaust lap on the crank end is not yet known, the student will continue the computations for this problem and come back to this formula when the size of the crank-end exhaust lap is obtained.

$$\left.\begin{matrix}\text{Width of}\\ \text{exhaust}\\ \text{port}\end{matrix}\right\} = \left\{\begin{matrix}\text{Maximum}\\ \text{inside or}\\ \text{exhaust lap}\end{matrix}\right\} + \left\{\begin{matrix}\text{Half}\\ \text{travel}\\ \text{of valve}\end{matrix}\right\} + \left\{\begin{matrix}\text{Width}\\ \text{of steam}\\ \text{port,}\end{matrix}\right\} - \left\{\begin{matrix}\text{Width}\\ \text{of}\\ \text{bridge.}\end{matrix}\right.$$

Equalizing Cut-Offs by Unequal Steam Laps

62. If cut-off occurs at the same percentage of the forward and return strokes it is said to be equalized. On the Zeuner diagram, already used, locate the crank position for equalized cut-off on the crank end, and dot in the corresponding lap circle. The diagram will now show that equalized cut-off obtained in this way gives excessive lead on the crank end, and is, as a rule, impracticable. It will not be used in this problem, but the "excessive lead" thus obtained should be marked as such on the diagram for future reference. Another method of equalizing cut-off without obtaining excessive lead will be described on a later page.

The steam lap on the crank end of the valve is to be made, in this problem, equal to that on the head end, and the crank and piston positions at admission and cut-off determined.

Equalizing Compression by Unequal Exhaust Laps

63. The exhaust lap already determined for the head end fixes the exhaust closure, or beginning of compression, for that end.

Digitized by Google

Now determine the exhaust lap that will give the same amount of compression on the crank end as on the head end. Then complete the design of the crank end of the valve as follows:

Having determined the width of the exhaust port $R\ V$, the center line $U\ X$ of the valve and ports may be drawn. The area Q of the cross-section of the exhaust port may be made equal to or a little less than the area of the steam port. The edges of the ports, as at $T\ B$, $P\ C$, $R\ D$, etc., are faced surfaces, while the remainder of the port is made a trifle larger, and is rough cast. The valve seat should be limited, as at E, so that the edge A of the valve will overtravel ¼ inch. The thickness $A\ F$ of the lap is generally made about the same as the bridge, and the thickness of the valve wall K a little less.

64. Place the necessary working dimensions on the design and mark the finished surfaces. Tabulate the results as follows:

	Valve Travel Ins.	Lead Ins.	Steam Lap Ins.	Exhaust Lap Ins.	Steam-port Opening Ins.	Per Cent of Stroke Completed When			
						Admission begins	Cut-off takes place	Release begins	Exhaust closure occurs
Head end									
Crank end									

Equalization of Release and Exhaust Closure by Unequal Exhaust Laps

65. If a valve were constructed with zero exhaust lap on each end, release on the head end and compression on the crank end would occur simultaneously when the crank is in position $O\ B$ tangent to the Zeuner circle $O\ L$, Fig. 21. The same would be true for release on the crank end and compression on the head end, with the crank in position $O\ C$ also tangent to the Zeuner circle $O\ L$.

When the crank pin is at B the piston is at B', and with the crank pin at C the piston is at C'. $J\ K$ represents the stroke of the piston. $J\ B'$ is smaller than $K\ C'$, and therefore neither release nor compression is equalized on the forward and return strokes when the exhaust lap on both sides is zero, and indicator cards from the two ends of the cylinder will not be similar.

In order to equalize these events, assume that release on the

Digitized by Google

head-end card is desired when the piston is at D, and compression when at E; also that release is desired on the crank-end card when the piston is at E, and compression when at D. Then, since $J\,D$ equals $K\,E$, release and compression will be equalized on both cards.

With D as a center and a radius equal to the connecting rod, locate the crank-pin center D' corresponding to D; locate simi-

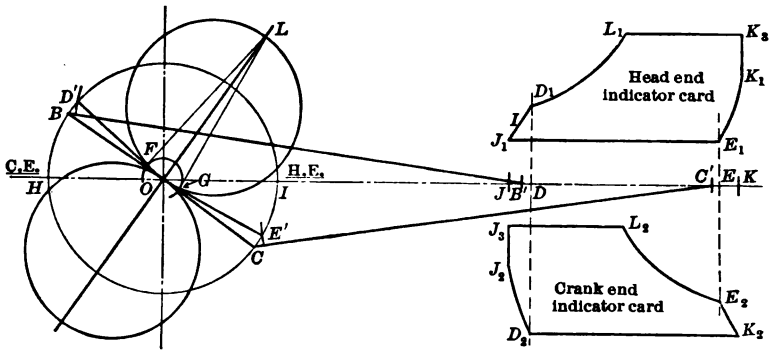

FIG. 21.—SHOWING EQUALIZED RELEASE AND EXHAUST CLOSURE, SPECIAL CASE

larly E'. By drawing the crank position $O\,D'$, we find that the valve requires a negative exhaust lap equal to $O\,F$ on the head end; similarly, a positive exhaust lap equal to $O\,G$ is required on the crank end. In this particular case, and when $J\,D$ and $K\,E$ are comparatively small, $O\,F$ and $O\,G$ will be so nearly equal that the difference in values can not be detected by ordinary graphical construction. Thus, both release and compression are not only equalized, but both are made to occur at similar points on the forward and return strokes, by giving negative exhaust lap to the head end, and an equal positive exhaust lap to the crank end of the valve. This irregularity in the construction of the valve, it should be noted, is due to the effect of the varying angularity of the connecting rod, referred to on a previous page. Under the conditions considered above, the indicator cards would be identical on the head and crank ends, and they are so indicated in Fig. 21.

66. The above is a special and simple case, and only applies when release and compression both occur at the same percentage of the stroke. In ordinary practice, as a rule, release occurs later than compression, and in such cases equalization of both compression and release is obtained approximately as follows:

In Fig. 22, assume that the valve design has been completed in all respects, except the determination of the exhaust laps. Then the angle of advance, valve travel, etc., are known.

Digitized by Google

Assume release on forward stroke (head-end card) at F, and
" " " return " (crank-end card) at G ($F B = G C$).
Also assume compression on forward stroke (crank-end card) at D, and
" " " return " (head-end card) " E ($D B = E C$).

The crank-pin positions for the piston positions F, G, D, and E may be found at F', G', D', and E'. Draw the corresponding crank positions shown by the dotted lines. Then the necessary exhaust lap for release (head-end card) at $A F'$ is $A K$, and the necessary exhaust lap for compression (head-end card) at $A E'$ is $A L$.

But the exhaust-lap at the head end of the valve can not have the two different values $A K$ and $A L$ at the same time. Therefore, a compromise is taken by making the head-end exhaust lap $= \frac{1}{2} (A K + A L) = A M = A N$.

Drawing crank lines through $A M$ and $A N$, the corresponding crank-pin positions O and P and piston positions O' and P' may be obtained, O_1 being release on head-end card, and P_1 compression on head-end card.

In the same way the compromise lap on the crank end of the

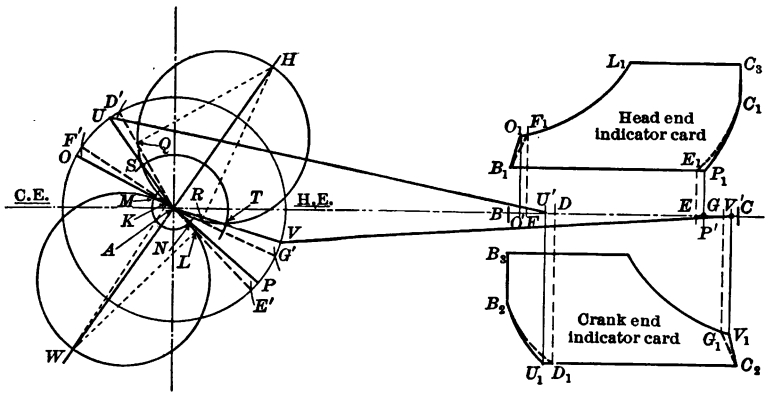

FIG. 22.—SHOWING EQUALIZED RELEASE AND EXHAUST CLOSURE, GENERAL CASE

valve will be $= \frac{1}{2} (A Q + A R) = A S = A T$, and release will occur at V' and compression at U'.

$P' C$ and $U' B$ will now be found to be approximately equal, and the compression on the two ends practically equalized, but not by the same amount as originally laid down at $D B$ and $E C$. If a definite compression were desired it would have to be found by drawing another trial diagram similar to Fig. 22.

Digitized by Google

Also, the distances $O'B$ and $V'C$ are approximately equal, and the release on the two ends thus practically equalized, but again not by the same amount as originally laid down at FB and GC. Equal indicator cards for the two ends are shown in Fig. 22. The indicator cards bounded by the dash lines and marked by the points F_1 and E_1 on the head-end card, and by G_1 and D_1 on the crank-end card, were the ones originally assumed equal to each other. The ones finally obtained are bounded entirely by solid lines and are approximately equal.

Effect of Rocker Arm

Equalizing Cut-Off with a Valve Having Equal Steam Laps

67. It was pointed out in the directions for drafting-table Prob. 1 (p. 26), that the cut-off could be equalized on the two ends of the cylinder by placing unequal steam laps on the valve, but that this method was objectionable for the reason that it gave very unequal leads. Another method for obtaining equalized cut-off, and at the same time retaining practically equal leads, is by means of the bent rocker. This method permits the use of equal steam laps on the valve. In laying out the Zeuner or other valve diagram for a required valve motion, no attention whatever is paid to the rocker arm. The diagram is always laid out originally as if the eccentric rod were directly connected to the valve stem. Allowance for the multiplying action due to unequal lengths of rocker arms is made in the layout described on the following pages.

68. The action of the rocker and the effect it has on the motion of the valve may best be shown by a practical application. Keeping in mind the fact that the valve must be the same distance off center when admission begins as it is when cut-off takes place (only going in opposite direction), it may be said in a general way that the rocker is proportioned and situated so as to have the valve in this place at the proper times, despite the effect of the unsymmetrical motion produced by the varying angularity of the connecting rod. In other words, a bent rocker is a piece of mechanism producing irregular motion, deliberately introduced to counterbalance the irregular motion produced by the connecting rod. Let Fig. 23 represent the valve and valve seat.

69. In Fig. 24, AD is the crank position for admission, head end

AE " " " " " " crank "
AF " " " " " ¾ cut-off, head "
AG " " " " " ¾ " crank "

Digitized by Google

The circle $D'\ F'\ E'\ G'$ is the eccentric circle drawn to the same scale as the crank circle. The angle $D\ A\ D'$ equals the angle between the crank and eccentric. Therefore,

the eccentric center is at D' when admission occurs at $A\ D$, head end
" " " " " F' " cut-off " " $A\ F$ " "
" " " " " E' " admission " " $A\ E$ crank "
" " " " " G' " cut-off " " $A\ G$ " "

With D' and F' as centers and a radius equal to the eccentric rod (in this case taken equal to the connecting rod) draw the arcs intersecting at L. Again with E' and G' as centers draw the arcs intersecting at M.

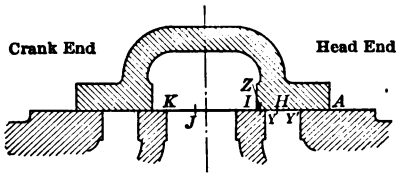

FIG. 23.—SHOWING VALVE IN CENTRAL POSITION

L is position for N of rocker arm for admission and cut-off, head end
M " " " " " " " " " " " crank "

Let N bisect distance $L\ M$, and $N\ O$ be drawn perpendicular to $L\ M$. The point O represents the rocker-arm shaft, and its actual location must be such as to afford a convenient attachment of the bearing to the frame of the engine. O is assumed here. When the rocker arm is in the position $N\ O$ the valve is central. While the end N of the arm is

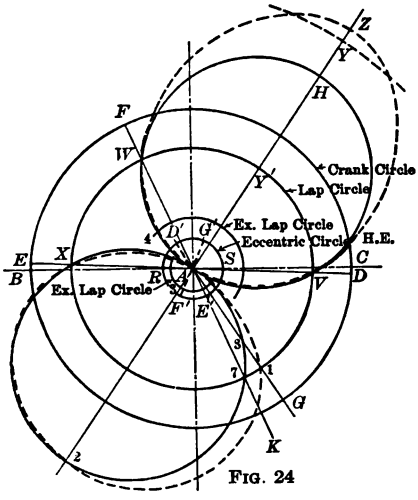

FIG. 24

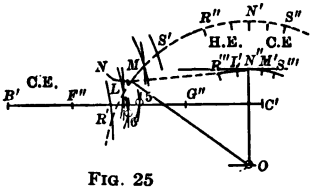

FIG. 25

FIGS. 24 AND 25.—SHOWING EFFECT OF A ROCKER ON THE VALVE TRAVEL AND ON THE STEAM DISTRIBUTION

going from N to L the valve must travel to the left, a distance equal to the steam lap, and the arm $N''\ O$ of the rocker must be proportioned so as to secure this result. This is done by making $N\ O : N''\ O :: N\ L :$ steam lap. N'' will be the end of the valve stem for central position. The center O for the

Digitized by Google

rock-shaft should be taken so that the arc $L\,M$ when prolonged in both directions will intersect the arcs at R' and S' drawn with A as a center and a radius equal to the length of the eccentric rod minus the eccentric radius in the case of R', and with a radius equal to length of eccentric rod plus the eccentric radius in the case of S'. These latter arcs contain the extreme positions of the eccentric rod, and limit the arc through which the point N oscillates. They also determine the total travel of the valve, and on this account $N\,R'$ and $N\,S'$ should be made as nearly equal as possible, and also as short as is consistent with the necessary valve travel. This latter may be determined by finding R''', N'', and S'''. Then the horizontal distances between R''' and N'', and between N'' and S''' must at least equal the original half-travel of the valve; otherwise there might be a contracted steam-port opening. O, as already stated, must be a convenient point on the engine frame, and the horizontal line through L' and M' must be at the elevation of the valve stem. O could be placed on the opposite side of $L\,M$ without affecting the equalization of admission or cut-off.

Unequal Valve Travel on Head and Crank Ends Due to Rocker

70. The introduction of the rocker has not only changed the total travel of the valve (compare $R\,S$ with $R'''\,S'''$), but has made the travel from the central position unequal on the head and crank ends. This change in travel may seriously affect some of the other events in the stroke, and must be looked into before the design is considered finished. The effect in this case is shown in Figs. 24 and 25 as follows:

With rocker, the travel of the valve to the left $= N''\,R''' = A\,Z$ (on enlarged scale), Fig. 24; equals also $A\,Z$, Fig. 23. Without the rocker, this travel is $A\,H$ in both Figs. 23 and 24. The increase is therefore $H\,Z$, and there is overtravel $= H\,Z$. The inside lap of the valve will go to J, Fig. 23 ($I\,J = A\,Z$), and the exhaust-port opening will be contracted to $J\,K$, which is less than the width of the steam port ($Y\,Y'$ = width of steam port), and which will, therefore, interfere with a free exhaust of steam. In such case the exhaust port must be widened and the valve lengthened to correspond. Such alteration does not interfere with the steam distribution.

Zeuner Circles Changed to Irregular Closed Curves by Rocker

71. From the foregoing it is evident that the Zeuner circles used, in designing the valve, do not show the true valve travel, or the

Digitized by Google

complete true steam distribution, *when* the rocker is added to the valve gear. To show this, the dotted closed curves $A\ V\ Z\ W$ and $A\ 1\ 2\ X$ would have to be drawn. $A\ V = A\ W = A\ 1 = A\ X$ (all on enlarged scale) $= L'\ N'' = N''\ M'$ (both on full-size scale). Also $N''\ R''' = A\ Z$ and $N''\ S''' = A\ 2$ when brought to the same scale. Intermediate points on the dotted curves may be determined by taking successive positions of the crank, and finding the corresponding distances the end of the valve stem N'' is off center, and setting these distances off on the crank positions. The maximum crank-end travel of the valve, in this case, happens to be the same with the rocker as without.

It will be observed that the effects of the different exhaust laps which give equalized compression, Fig. 24, are very slightly changed by introducing the bent rocker. This is shown by the dotted curves agreeing very closely with the original Zeuner circles within the limits of the radii of the exhaust-lap arcs, $A\ 3$ and $A\ 4$.

72. In some problems it may be possible to design the rocker so that a symmetrical valve will equalize exhaust and compression in addition to equalizing cut-off and lead, as follows: Locate point 5, Fig. 25, in the same way that L was found, only using the eccentric center positions at release and compression, head end. Also locate point 6 for the crank end. If, in addition to the considerations already mentioned for determining the position of the rock shaft O, the arc passing through L and M can be made to include the points 5 and 6, so that they are symmetrical with respect to N, the equalization will be accomplished. With zero inside lap there will be only one point instead of 5 and 6, and this may be made to fall on the arc $L\ M$ at N, and then all four events would be equalized, with a symmetrical valve, by the rocker.

Limited Use of the Plain D-Valve

73. On page 4 it was pointed out that a plain slide valve with zero steam lap admitted steam to the engine cylinder during the full stroke. Also that to cut off the admission of steam before the end of the stroke, steam lap had to be added to the valve. This suggests the fact that the earlier the cut-off the larger the steam lap must be. When steam lap becomes too large, the valve travel and friction become too great, and the plain D-valve, as shown in Fig. 23, can no longer be used economically. The effect of early cut-off is shown in Fig. 26.

Let the dotted construction be the Zeuner diagram for an engine

Digitized by Google

having ¾ cut-off, port opening = $E F$, and lead = $C D$. Let the solid construction be the Zeuner diagram for the same engine with ½ cut-off, and with the port opening and lead the *same as for ¾ cut-off*. Then $E' F' = E F$ and $C' D' = C D$.

The lap necessary for ¾ cut-off is $A B$. For ½ cut-off it is found to be $A G$. The half valve travel for ¾ cut-off is $A F$ and for ½ cut-off it is $A F'$. An increase in valve travel, as may be seen from Fig. 23, calls for a wider exhaust port, and therefore a larger valve. A larger valve has additional area exposed to steam pressure and also greater weight of itself, thus giving an increased amount of sliding friction. The additional weight and friction also affect the sensitive action of the governor.

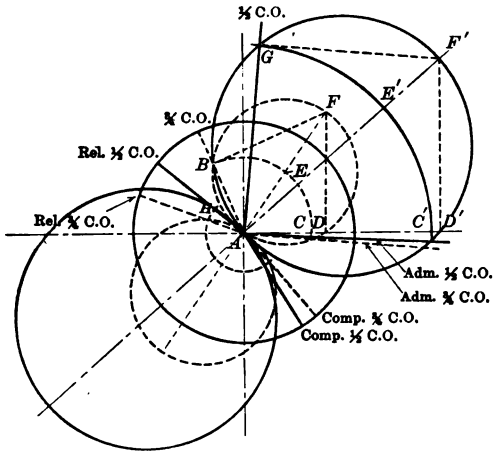

FIG. 26.—SHOWING EFFECTS OF EARLY CUT-OFF WITH PLAIN D-VALVE

Still further, in Fig. 26, it may be seen that for the earlier cut-off the release and compression are both earlier. (The exhaust lap $A H$ has remained the same for ¾ and ½ cut-off.) If the attempt is made to correct the release so as to make it later by increasing the exhaust lap, the compression is made still earlier.

The above considerations affecting the action of the plain D-valve have established a limit to which, in its simple form, it may be economically used. It is sometimes employed for cut-off at ½, but as a rule not earlier than ⅝ stroke with a fixed eccentric.

SPECIAL VALVE-DIAGRAM EXERCISES

74. In addition to drafting-table problem No. 1, and the several exercises given on pages 15, 16, and 17, the following problems given by Welch in his treatise on "Valve Gears" should be noted:

Given: Valve travel, position of crank for cut-off, and lead. See Fig. 27.

Find: Lap and angle of advance.

Digitized by Google

$A\ B$ = ½ valve travel.

$A\ P$ = position of crank at cut-off.

With A as a center, and $A\ B$ as a radius, draw a circle intersecting the horizontal line $A\ J$ at D. With D as a center and a radius equal the lead, draw the "lead circle" $T\ H\ J$.

From P draw line $P\ K$ tangent to the lead circle.

Draw $A\ K$. Draw the circle $V\ Z\ R$ tangent to $P\ K$.

Then $V\ Z\ R$ = lap circle. Draw $A\ E \perp$ to $P\ K$.

Then $< B\ A\ E$ = angle of advance.

$A\ K$ = position of crank at admission and $Q\ L = D\ T$ = lead.

Proof that $Q\ L = D\ T$.

Draw $E\ R$ and $E\ L \perp$ to $A\ K$ and $A\ D$ respectively.

Draw $D\ F$ parallel to $K\ Z$. Draw $D\ H$ parallel and equal to $F\ Z$.

In triangles $E\ A\ R$ and $K\ A\ Z$; $E\ A = A\ K$, $< E\ A\ K$ is common, and angles $E\ R\ A$ and $K\ Z\ A$ are right angles.

$\therefore$ triangles $E\ A\ R$ and $K\ A\ Z$ are equal, and $A\ Z = A\ R$. Also $A\ Q = A\ R = A\ Z$ by construction.

In triangles $E\ A\ L$ and $D\ A\ F$; $E\ A = A\ D$, $< E\ A\ D$ is common, and angles $E\ L\ A$ and $D\ F\ A$ are right angles.

$\therefore$ triangles $E\ A\ L$ and $D\ A\ F$ are equal and $F\ A = A\ L$.

$\therefore\ Q\ L = F\ Z$. But $F\ Z = D\ H = T\ D$ by construction.

$\therefore\ Q\ L = T\ D$ = lead.

75. Given: Crank positions at exhaust opening and exhaust closure and at cut-off; also the lead.

Find: Angle of advance, valve travel, and steam and exhaust laps.

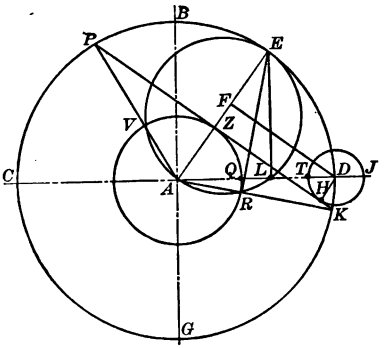

FIG. 27.—ZEUNER DIAGRAM FOR SPECIAL DATA, PARAGRAPH 74

At any point A, Fig. 28, lay off lines $A\ B$ and $A\ C$ parallel respectively to the given crank positions at exhaust opening and exhaust closure. Bisect the angle $B\ A\ C$, thus obtaining the diametral line $A\ D$ for the Zeuner circles. Lay off the lead from A on a horizontal line as at $A\ G$, and draw the vertical line $G\ H$. From A draw the line $A\ E$ parallel to the crank position at cut-off and draw the line $A\ F$ perpendicular to it. Bisect the angle between $A\ F$ and $G\ H$ as shown at $J\ K$, and mark the point O where this bisecting line crosses $A\ D$. Although these two lines cross at a very acute angle, the intersecting point may be determined with considerable accuracy by

Digitized by Google

first marking the points where the white paper begins to show at each end of the intersection and then taking the exact point of intersection as midway between these two. Then $O\,A$ will be the half-travel of the valve and the two Zeuner circles $O\,A$ and $O\,D$ may be drawn. The radius of the arc $N\,P$, tangent to the lead line $G\,H$ and to the line $A\,F$, will be equal to the steam lap, and $O\,Q$ and $O\,R$ drawn through the points L and N respectively will be the crank positions at admission and cut-off. The lines $O\,S$ and $O\,T$, parallel respectively to the assigned lines $A\ B$ and $A\,C$, will be the crank positions at exhaust opening and exhaust closure. Also the radius of the arc $U\,V$ will be equal to the exhaust lap.

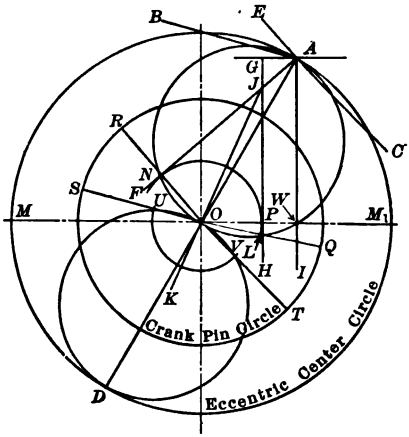

FIG. 28.—ZEUNER DIAGRAM FOR SPECIAL DATA, PARAGRAPH 75

76. All of the required information has now been obtained for one end of the valve, and the data for the other end of the valve could be readily obtained by adding the necessary lines, as was done in drafting-room problem No. 1. The general method of procedure for working this problem and its relation to other problems that are more directly constructed may now be noted by observing that if the lines which are characteristic of this diagram, namely, $A\ B$, $A\,C$, $A\,E$, $A\,F$, $G\,H$, and $J\,K$ were added to the simple Zeuner diagram, it would be identical with the present one. In drawing the various lines of this diagram, advantage is taken of several simple geometric characteristics of the Zeuner diagram, namely, that the diametral line bisects the crank positions at exhaust opening and exhaust closure, that the centers of the lap circles lie on the diametral line, and also on a line which bisects the angle formed by the tangents to the lap circle at the zero and cut-off positions of the crank, no matter what the lead may be, and finally that the diameter of the Zeuner circle must always be the hypothenuse of a right-angle triangle in which the angle $A\,O\,N$ at the base and the length $O\,N$ of the base are known.

Digitized by Google

The Allen Valve

77. This type of valve is common in locomotive work when flat valves are used. Its rapid admission of steam, due to the auxiliary passage way which is cored from one side of the valve to the other, as shown at $P\,R - D\,E$, Fig. 29, and its peculiar rate of opening the steam port have given it the name also of "Trick" valve. It is an essential feature of construction that the valve and valve seat must be so built that R passes M just as C passes B. With this in mind, the peculiarity of the opening areas may be pointed out in three steps as follows: (1) Assume that the valve has been in its central position K at H, and that it has been and is moving to the right. When C reached B, R reached M, and there was increasing port opening at two places, $B\,C$ and $R\,M$, until $B\,C$ became equal to $R\,P$. (2) If the port width $B\,O$ is made equal to $B\,C + C\,D + D\,E$, as

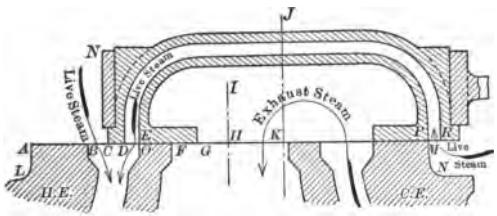

Fig. 29

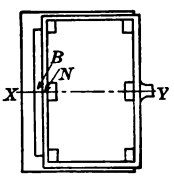

Fig. 30

Fig. 29.—Allen Valve. Section on $X\ Y$ of Fig. 30
Fig. 30.—Top View of Allen Valve and Valve Seat

it may be, the port opening at $B\,C$ will increase at the same rate that $D\,E$ decreases, and there will be constant port opening, although two ports will be in action. (3) After D passes O, if it is designed to travel that far, there will be increasing port opening through a single port up to the end of the valve travel. If $B\,O$ is greater than $B\,C + C\,D + D\,E$ there will be another rate of steam admission between steps one and two, in which there will be increasing port opening at $B\,C$ and constant port opening at $D\,E$ until E reaches O.

In Fig. 29 assume that $B\,C = D\,E$ and that $B\,O = 2\,D\,E + C\,D$ and also that the valve is in its extreme right-hand position, having moved a distance equal to the lap + ½ the port opening $B\,C$. The steam lap = $K\,C - H\,B$, which should be equal to, or greater than $C\,E$, in order to keep the two ends of the cylinder from being in communication through the passageway in the valve. A

Digitized by Google

top view of the valve, with so much of the valve seat as is visible, is shown on reduced scale in Fig. 30.

Drafting-Table Problem No. 2. Design for an Allen Valve

78. Let it be required to design an Allen valve for an engine having a 10-inch bore, 14-inch stroke, running at 170 revolutions per minute and cutting off at 45 per cent of stroke on both ends, with $\frac{1}{16}$-inch lead on head end. Use zero exhaust lap on both ends. The steam port may be taken .7 of the bore. Take live and exhaust steam velocities the same as in problem No. 1. The connecting rod may be taken five times the crank length. Take wall at $C\,B$, Fig. 31, $\frac{1}{2}$ inch.

79. The first step in this design consists, as in problem 1, in calculating the width of port opening and width of steam port. Then lay out the crank circle and crosshead travel to the largest regular scale that the drawing paper will allow. Judgment must be used in determining the scale for the Zeuner diagram, based on the principle that the largest convenient scale for geometrical drawings gives the greatest accuracy.

Effect of Double-Lead and Double-Admission Areas on Zeuner Diagram Construction

80. The $\frac{1}{2}$ valve travel in drafting-table problem 1 was equal to the lap + the whole width of the steam-port opening. In this problem it is equal to the lap + $\frac{1}{2}$ the calculated width of the steam-port opening, because the Allen valve is in effect two plain D-valves combined, and admits steam to the same steam port through two openings at the same time. Each opening then takes care of $\frac{1}{2}$ the lead, and in laying out the Zeuner diagram for the Allen valve, only $\frac{1}{2}$ the given lead as well as $\frac{1}{2}$ the calculated width of the steam-port opening is considered. When the Zeuner diagram is completed, designate the crank positions in the manner shown in Fig. 26.

81. The valve may now be laid out full size. Starting with the point B, Fig. 31, which is an illustration for a general case, $B\,E$ = steam lap. $B\,C$ = thickness of flange of the outside valve wall which should be a little wider than the valve wall to allow for facing and small enough so that $B\,C + C\,D$ is equal to or less than the steam lap, otherwise the two ends of the cylinder might be in communication through the auxiliary passage X for an instant. If $C\,B$

Digitized by Google

should come so small as to prevent a good casting, some one or more conditions of the design would have to be changed.

$C\,D$ = ½ width of calculated steam-port opening.
$E\,F^*$ = $2\,C\,D + B\,C$.
$F\,G$ = exhaust lap.
$F\,H$ = width of bridge = ⅝ inch for engine given in this problem.
$H\,I$ = ½ width of exhaust port.

Total width of exhaust port = maximum exhaust lap + ½ travel of valve + calculated width of steam port − width of bridge.

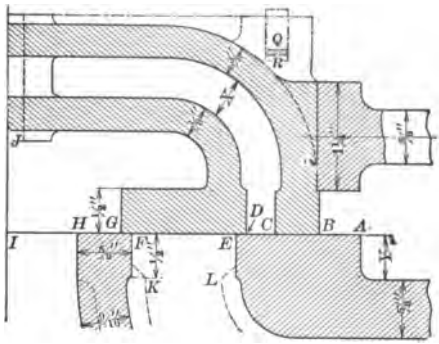

FIG. 31.—SHOWING LAYOUT OF ALLEN OR "TRICK" VALVE

82. The location of the point A is important, for just as the point corresponding to B on the other end of the valve is uncovering the point corresponding to E the point C must be uncovering A. Therefore, $C\,A$ must equal the steam lap on the other end of the valve.

It will be evident that Y must be at least equal to $C\,D$ so as to give free admission to the valve passage X. It should be made equal to $C\,D$ + ⅛ inch, or more, as may be desired.

X may also be made equal to $C\,D$ + ⅛ inch to allow for friction of steam in the rough-cored passageway.

$I\,J$ may be taken = ½ (calculated width of steam port + width of exhaust port).

All the remaining dimensions necessary to complete the design are independent of the action of the valve so far as steam distribution is concerned, and are determined solely according to the size of the valve. For this problem they may be taken as shown in Fig. 31.

Locomotive Balanced Valve

83. The Allen valve may be converted into the ordinary locomotive balanced valve by adding metal in the form of dash lines shown

* When $E\,F$ is much larger than the calculated width of port, it may be reduced to the correct size in some such way as shown by the dotted lines at K and L (= calculated width of port) in Fig. 31; or a face plate may be used. These dotted lines are not to be drawn by the student.

Digitized by Google

at the top of the valve, which the student should do. Q is a slot containing a rectangular bar which is kept against the faced surface of the cover of the steam chest, as the valve slides back and forth, by means of a spring at R. This slot and the bars extend all around the valve, and keep the live-steam pressure from exerting its power to press on the back or top of the valve and thus force it against the valve seat with greatly increased friction. In the locomotive balanced valve there is a small hole through the center communicating with the exhaust. This carries off any live steam that may leak through.

Place the necessary working dimensions and mark the finished surfaces on the design.

Tabulate the results as in drafting-table problem No. 1.

Limited Use of the Allen Valve

84. That the Allen valve can not be used to advantage for cut-off much later than half-stroke with a fixed eccentric may be seen by referring to Figs. 32–35. A valve is shown in part section in Fig. 33,

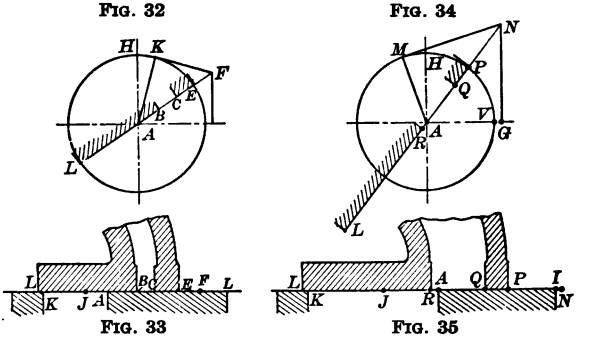

FIGS. 32–35.—SHOWING HOW A VALVE PASSAGEWAY MAY BE PLACED IN THE STEAM LAP

and its corresponding Zeuner diagram is shown in Fig. 32, both illustrations being to the same scale and similarly lettered. It will be noted that the lap $A\ E$ is large enough to contain the valve-wall thickness $C\ E$, the passageway $B\ C$, equal to $E\ F$, and to have some space $B\ A$ left over. But in Fig. 34, let the cut-off be assumed at $A\ M$, keeping the same lead and lap; then the single port opening becomes $P\ N$. If now the necessary valve-wall thickness is laid off equal to, say, $P\ Q$, it is found that there is not enough room in the steam lap for another passageway equal to $P\ N$, and therefore that cut-off as late as $A\ M$ is not possible with an Allen valve when it

Digitized by Google

has the data here used and when it is directly connected to a "fixed" eccentric. With special forms of valve gears and governors, the travel of the valve and the angle of advance may be varied automatically, and the cut-off made later, as will be shown when the different forms of valve gears and governors are taken up.

Digitized by Google

SECTION II—VALVE DIAGRAMS FOR STEAM ENGINES

95. As stated on page 9, a number of diagrams, in addition to the Zeuner diagram, have been devised to show graphically the relative positions of the valve and crank at any instant. A description, with practical applications of same, of the more important diagrams will now be given.

Bilgram Diagram

96. Let it be considered that the crank is on the head-end dead center on the line $A\ B$, Fig. 46, and turning in the direction shown by the arrow. Also let the distance $A\ B$ represent the ½ valve travel, and draw the eccentric-center circle $H\ B\ C$. Then on the opposite side

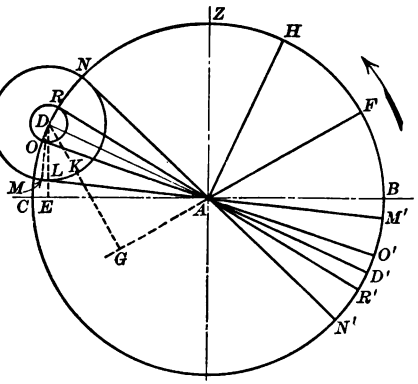

Fig. 46.—Bilgram Diagram

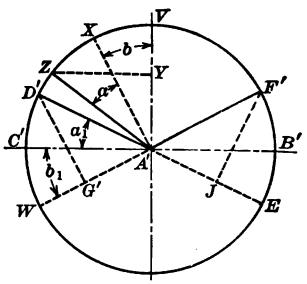

Fig. 47.—Proof for Bilgram and Reuleaux Diagrams

of the crank lay off the angle $C\ A\ D$ = the angle of advance.

From D draw the line $D\ E$ perpendicular to the crank position $B\ A$ prolonged, and $D\ E$ will be the distance the valve is off center when the crank is at $A\ B$. Likewise,

when the crank is at $A\ F$ the valve is off center $D\ G$, and
" " " " " $A\ H$ " " " " " $D\ A$ (max. dist.)
" " " " " $A\ D$ " " " central.

The reason for these facts may be found in Fig. 47, where $A'\ F'$ is an assumed position of the crank, and $A'\ Z$ the corresponding eccentric position, with $X\ A'\ Z$ (= $C\ A\ D$, Fig. 46) as the angle of

Digitized by Google

advance. Then with the crank at $A'F'$ the valve is off center a distance $Z\,Y$. It remains to show that $Z\,Y = D'\,G'$.

$< X\,A'\,Z = < D'\,A'\,C' =$ angle of advance. Since $X\,A'$ is $\perp$ to $A'\,W$, and $V\,A' \perp$ to $A'\,C'$, the $< X\,A'\,V = < C'\,A'\,W$. Therefore, $< D'\,A'\,W = < Z\,A'\,V$. Also, angles $D'\,G'\,A'$ and $Z\,Y\,A'$ are right angles, and the triangles $D'\,A'\,G'$ and $Z\,A'\,Y$ are equal. $\therefore Y\,Z = D'\,G'$.

Since $D\,G$, Fig. 46, equals the distance the valve is off center, it is only necessary to draw a circle with $D\,K$ (= the steam lap) as a radius and $K\,G$ will equal the live-steam port opening for the crank position $A\,F$.

$L\,E$ = the lead. $A\,M'$, drawn with its prolongation tangent to the steam-lap circle, is the position of the crank for admission. $A\,N$, also tangent to the steam-lap circle, is the cut-off position.

If the valve has an exhaust lap $D\,O$, the exhaust-lap circle should be drawn with a radius $= D\,O$, and then $A\,O$, tangent to it, will be the crank position for release. Likewise $A\,R'$, with its prolongation tangent to the exhaust-lap circle, will be the position for compression.

For the crank end of the cylinder $A\,M$ is admission; $A\,N'$ cut-off; $A\,O'$ release, and $A\,R$ compression. In Fig. 46, the steam- and exhaust-lap circles are taken the same on both the head and crank ends.

If the head-end exhaust lap had been negative, $A\,R$, instead of $A\,O$, would have been the release position for the head end.

Solution of Drafting-Table Problem No. 1 by Bilgram Diagram

97. Drafting-table problem 1, of this course, would be solved by the Bilgram diagram as follows:

Given: Cut-off, release, lead, and maximum live-steam port opening. To find: Steam and exhaust laps, travel of valve, and crank positions for the events of the stroke.

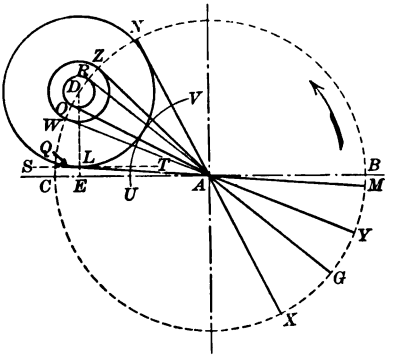

FIG. 48.—PRACTICAL APPLICATION OF BILGRAM DIAGRAM

In Fig. 48 draw line $C\,B$ for center line of engine. At any point A draw $A\,N$ for the given cut-off position. Draw line $S\,T$ parallel to $C\,B$ and a distance from it equal to the lead. Draw arc $U\,V$ about

Digitized by Google

A as a center with the calculated width of steam-port opening as a radius. Find by trial the center D of a circle that will be tangent to $A\ N$, $S\ T$, and the arc $U\ V$.

Then $D\ L$ is the required steam lap. Draw $A\ O$ for the given release position, and determine the exhaust lap by drawing a circle with D as a center and tangent to $A\ O$.

If $D\ W$ represents the necessary exhaust-lap circle for the crank end to give equalized compression, as called for in drafting-table problem 1, then the events of the stroke are as follows:

	Admission	Cut-Off	Release	Compression
Head end.....	$A\ M$	$A\ N$	$A\ O$	$A\ G$
Crank end.....	$A\ Q$	$A\ X$	$A\ Y$	$A\ Z$

Reuleaux Diagram

98. In making use of this diagram let the indefinite line $C\ A\ B$, Fig. 49, be the center line of the engine, and at any point A draw $A\ Z$ perpendicular to it. Draw the circle $C\ Z\ B$ with a radius equal to the half-travel of the valve, and lay out the angles $Z\ A\ H$ and $B\ A\ D'$ each equal to the angle of advance. Then for any position of the crank such as $A\ F$, it is only necessary to draw from F, the point where the crank line crosses the valve circle, a perpendicular to the line $A\ D'$ limiting the angle of advance, to find the distance $F\ G$ that the valve is off center.

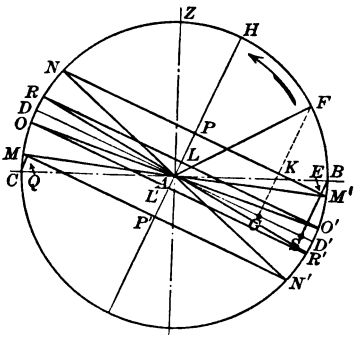

Fig. 49.—Reuleaux Diagram

This may be proven with reference to Fig. 47, where $A'\ F'$ is a given crank position and $D'\ E$ the line limiting the angle of advance ($= B'\ A'\ E$). Since Z is the eccentric-center position for the crank position $A'\ F'$, $Z\ Y$ is the distance the valve is off center. It is only necessary to demonstrate that $F'\ J = Z\ Y$. This is readily done, for the reason that in the right-angle triangles $Z\ A'\ Y$ and $F'\ A'\ J$, the sides $A'\ Z$ and $A'\ F'$ are equal, and the angles $Z\ A'\ Y$ and $F'\ A'\ J$ are equal. (Angle $B'\ A'\ E$ = angle $Z\ A'\ X$ = angle of advance; and angle $B'\ A'\ F'$ = angle $X\ A'\ V$, the sides being respectively perpendicular.) Therefore, the triangles are equal, and

Digitized by Google

$F' J = Z Y$ = distance the valve is off center for crank position $A' F'$.

In Fig. 49 draw the line $N M'$ parallel to $D A D'$, and at a distance from it equal to the steam lap = $A P$. Then for any crank position such as $A F$ the steam port is open $F K$. $A P$ = the steam lap for one end of the valve, and $A P'$ the steam lap for the other end. In this case they are equal.

Likewise $A L$ = the exhaust lap for one end, and $A L'$ for the other. Lines drawn through L and L' parallel to $D D'$ are the exhaust-lap lines. $B E$ is the lead for the head end, and $C Q$ for the crank end.

The events of the stroke, according to the Reuleaux diagram, occur as follows:

	Admission	Cut-Off	Release	Compression
Head end.....	$A M'$	$A N$	$A O$	$A R'$
Crank end.....	$A M$	$A N'$	$A O'$	$A R$

99. The lines of the Reuleaux diagram may be used to check the work of the Zeuner diagram, as follows: If, in Fig. 8, a straight Reuleaux line is drawn from N to P, it will be tangent to the lap circle at F, if the Zeuner lines are correctly drawn, and this line will correspond to the line $N P M'$ in Fig. 49. When checking the work in this way, the points such as N and P must be at the intersection of the crank lines and the circle whose diameter is equal to the valve travel. Again, a straight line from S to Q, Fig. 8, should be tangent to the exhaust-lap circle at L. Furthermore, the Zeuner steam- and exhaust-lap arcs may be drawn in the Reuleaux diagram and if the latter is correct, the arcs will be tangent to the line $N M'$ at P, Fig. 49, and to $O R'$ at L' respectively.

Valve Ellipse

100. The valve ellipse is a curve in which the ordinates show the amount the valve is off center; and the abscissæ, the corresponding piston positions.

It may be obtained, as in Fig. 50, by dividing the crosshead travel into any number of equal parts as at 1, 2, 3, etc. With these divisions as centers, and with a radius equal to the length of the connecting rod, strike arcs intersecting the crank-pin circle in the points 1', 2', 3', etc.

Digitized by Google

$A\ R$ is the radius of the eccentric-center circle, and the angle $O'\ A\ R$ is the angle between the crank and the eccentric. The points $R\ E\ F\ G$, etc., show the eccentric-center positions for the corresponding crank-pin positions 0′, 1′, 2′, 3′, etc.

Then with piston at 0 the valve is off center the distance $R\ H = O'\ L$

" " " " 1 " " " " " " " " $E\ I = D\ M$

" " " " 2 " " " " " " " " $F\ J = C\ N$

etc., and these values, $O'L$, $D\ M$, $C\ N$, etc., laid off on the piston-position ordinates through O', D, C, etc., in the valve-ellipse diagram

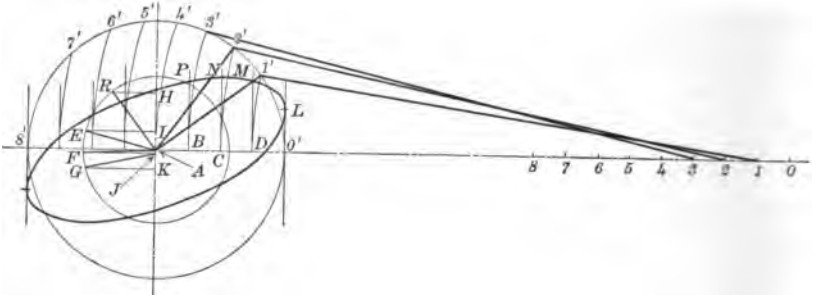

FIG. 50.—METHOD OF CONSTRUCTING VALVE ELLIPSE

determine the points on the valve ellipse. The points D, C, B, etc., are equally spaced the same as the points, 1, 2, 3, etc., in the cross-head stroke.

The curve generated in this way, although called the "valve ellipse," is not a true ellipse, unless the connecting rod is of infinite length, in which case the points 1′, 2′, 3′, etc., would lie on the ordinates through D, C, B, etc.

101. In Fig. 51 the dotted curve is for the mechanical equivalent of the infinite connecting rod, and is a true ellipse, while the full curve is for a connecting rod = 4 crank lengths.

For the crank position $A\ D$, or the equivalent piston position $E\ H$, Fig. 51, and the finite connecting rod, the valve is off center the distance $H\ E$. If the valve has a lap = $H\ F$ the live-steam port opening for this position is $F\ E$ on the head end, and if the exhaust lap on the crank end of the valve is $H\ G$ the opening of the port to exhaust is $G\ E$. The steam- and exhaust-lap lines are drawn parallel to the center line $B\ C$.

It follows, then, that the point in which the steam-lap line intersects the valve ellipse determines directly the piston positions, and indirectly the crank positions at admission, cut-off, etc. For cut-off on the head end, finite card, the piston is at L'', directly below L,

Digitized by Google

Fig. 51. Projecting L to the center line and drawing an arc with the connecting rod as the radius, $A\ M$ is obtained for the crank position at cut-off. In like manner the crank positions for release, compression, and admission may be found.

Method of Determining Steam and Exhaust-Port Openings and Steam and Exhaust Laps by Combining the Valve Ellipse and Indicator Cards, and Without Removing Steam Chest Cover

102. By combining the valve ellipse and the indicator card, as shown at Fig. 51, a ready means is afforded for examining the steam

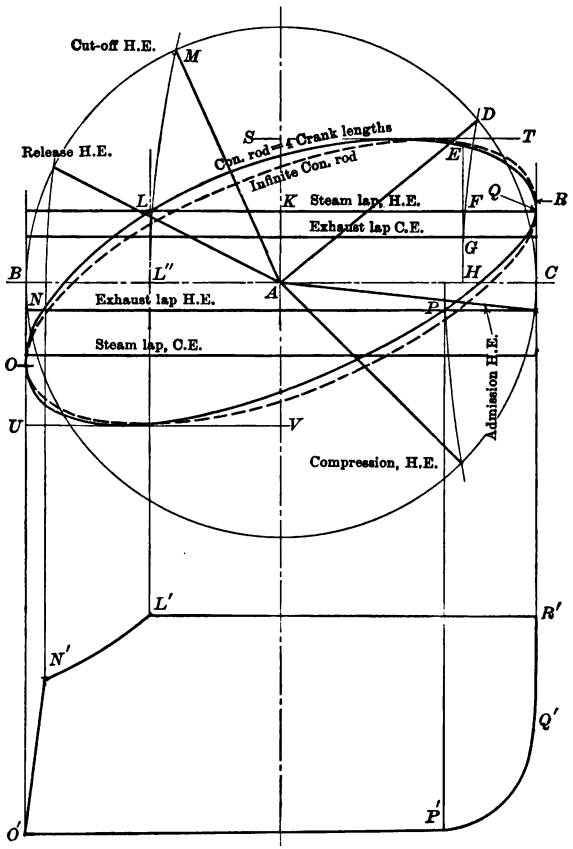

FIG. 51.—SHOWING RESULTS OBTAINED BY COMBINING VALVE ELLIPSE AND INDICATOR CARD

distribution of a plain D- or piston valve, and also for determining the steam and exhaust laps, *without removing the steam chest cover*

Digitized by Google

or disturbing the valve or the running of the engine in any way. This is done by taking the indicator card from the engine in the usual way, and at the same time taking the valve ellipse automatically from the engine, and drawing the two curves one under the other, as in Fig. 51. The full-line valve ellipse is, so far then, all that is known in Fig. 51. In obtaining the valve ellipse the abscissæ displacements would come from the crosshead, and the ordinate displacements from the valve stem. To get at the information which it contains, first draw the lines $S\ T$ and $U\ V$ tangent to the ellipse and parallel to the stroke line, which would be recorded in obtaining the ellipse card. The perpendicular distance between $S\ T$ and $U\ V$ is the total valve travel. Draw the line $B\ C$ midway between $S\ T$ and $U\ V$.

On the indicator card determine the points L' (cut-off), N' (release), P' (compression), and Q' (admission), and project these points up to the ellipse at L, N, P, and Q. Then, since admission and cut-off are both governed by the steam lap, the points L and Q should each be a distance from $B\ C$ equal to the steam lap, and lie on the steam-lap line, which is thus determined. Likewise N and P should each be the same distance from $B\ C$, and determine the exhaust lap.

The laps of the valve, together with its travel, and also the amount of steam-port opening for either live or exhaust steam at any instant, are now known for the head end. For the crank end, the crank-end indicator card and ellipse would be taken in the same manner.

Sinusoidal Diagram

103. In this diagram the crank angles are laid off on the abscissa line, and the piston and valve displacements on the ordinates.

The sinusoidal diagram affords a ready means for studying the steam distribution for setting the eccentric so as to secure the best results for a given engine.

In Fig. 52 take a distance such as $B\ C$ to represent 360°, and divide the line into a convenient number of equal parts. On the ordinates through the division points lay off distances equal to the corresponding piston displacements, thus obtaining a curve through the points $C\ D\ B$.

For the infinite connecting rod the curve is a sinusoid, as shown by the dash line. The points on the solid curve, which in this case is for a connecting rod equal to four crank lengths, are found by making the ordinates through 45°, 90°, etc., of Fig.

Digitized by Google

52, equal to $G\,D$, $F\,D$, etc., of Fig. 53, which is here drawn one-half size.

In Fig. 52 the sinusoidal curve $I\,W\,J$ has its maximum ordinate $V\,W$ = half-valve travel, and its pitch $X\,Y = B\,C$. The distance $A\,S$ corresponds to an assumed angle of advance, which in this case is equal to 35°. This curve, as drawn in Fig. 52, neglects the angularity of the eccentric rod, and is a sinusoid. It may be so used practically, unless an investigation is one of much precision, in which case the actual valve curve may be found by the method shown in Fig. 53.

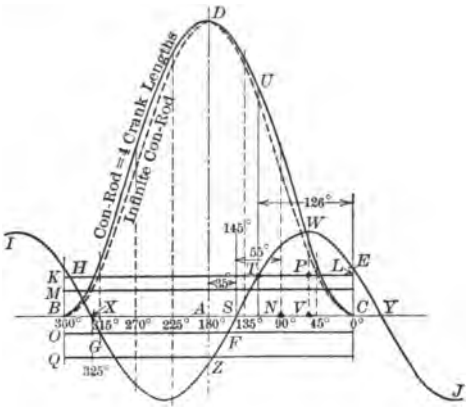

FIG. 52.—SINUSOIDAL DIAGRAM

In Fig. 52, let $B\,K$ = the steam lap, head end,
$B\,Q$ = " " crank end,
$B\,O$ = " exhaust lap, head end,
$B\,M$ = " " " crank end.

Draw lines through K, Q, O, and M, parallel to $B\,C$. Then cut-off, head end, occurs at T (126°), release at F (158°), compression at G (315°), and admission at H (355°). $L\,E$ is the lead.

In order to use this diagram for determining the effect of different angles of advance, the valve curve should be extended as shown to I and J, and then drawn on a piece of tracing paper or cloth. By placing the curve so that S falls on A the events of the stroke for zero angle of advance are found at once; with S at N (90°) the events for 90° angle of advance are known. For intermediate angles of advance S falls between A and N. The effect of changing the valve laps may also be readily shown by raising or lowering the lap lines.

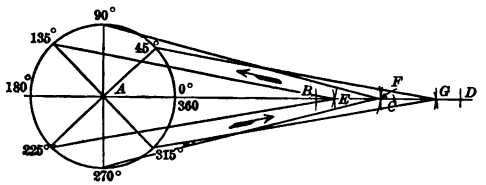

FIG. 53.—CONSTRUCTING "SINUSOID" WHEN ALLOWANCE IS MADE FOR ANGULARITY OF ECCENTRIC ROD

Digitized by Google

SECTION III—FUNDAMENTAL VALVE FORMS

Effect of Friction Due to Pressure on Back of Plain D-Valve

114. Thus far, the plain D-valve and the Allen valve are the only types that have been treated. It has been shown that the plain D-valve has a limited range of application, and that for cut-offs earlier than $\frac{5}{8}$ stroke a D-valve of excessive and impracticable weight and travel would be required. Furthermore, the steam pressure on the back of the plain D-valve, in addition to the pressure due to the weight of the valve (when in a horizontal position), increases largely the friction on the valve seat. In an engine of 14 inches bore, with a plain D-valve $8\frac{1}{2}$ inches long and $12\frac{1}{2}$ inches wide, and a steam pressure of 70 pounds, the pressure on the back of the valve would be $8.5 \times 12.5 \times 70 = 7{,}437$ pounds, or 3.7 tons. When a valve is so designed that this pressure can not act on any considerable portion of it so as to produce pressure and friction on the valve seat, it is said to be "balanced." In engines (especially those of high speed) where the adjustment of the cut-off, etc., is produced by the effort of the governor in changing the position of the valve, the friction due to such high pressure is too great to be properly overcome directly.

115. On account of the friction due to weight and unbalanced steam pressure in the plain sliding D-valve, engine builders have had to invent and adopt other forms of valve construction. There are other reasons, however, for adopting different forms of valves, one being the desirability of having short straight ports at the ends of the cylinders as shown at $K\ L$ in Fig. 112, instead of the tortuous ones from the center to the ends, such as are shown at Q', in Fig. 1, and are necessary with a D-valve of minimum weight. Still another reason for different valve forms lies in the endeavor to obtain ample port opening for both admission and release of steam or gas, without using too large a valve or too large a valve travel. This brings the matter back again to the reduction of driving power by balancing against undesirable pressure on the valve.

116. The fundamental types of valves that are used or that may be used are the same in all forms of prime movers, although the details of construction may vary according as they are applied to steam engines, steam turbines, or internal combustion engines. All of the

Digitized by Google

valves in use on prime movers fall within one of the following subdivisions, all of which are illustrated in their elementary forms at this place. Later in the book many of these elementary valves will be again illustrated

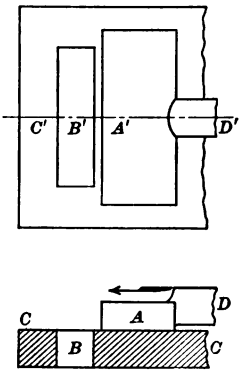

FIG. 64.—FLAT VALVE

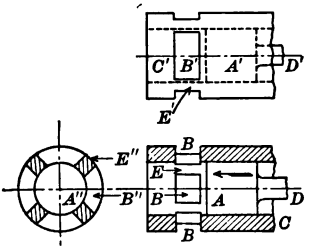

FIG. 65.—PISTON OR ROUND VALVE

in their modified forms to suit the special conditions under which they are operating. The types of valves for prime movers are:

RECIPROCATING VALVES

which have a back-and-forth motion. These may be:

Flat or D-Valves, Fig. 64.
Piston or Round Valves, Fig. 65.
Sleeve Valves, Fig. 66.

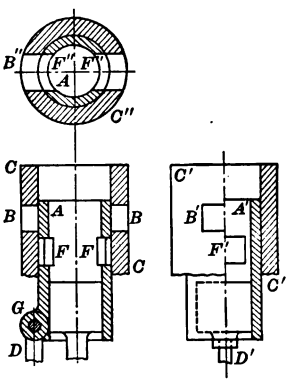

FIG. 66.—SLEEVE VALVE

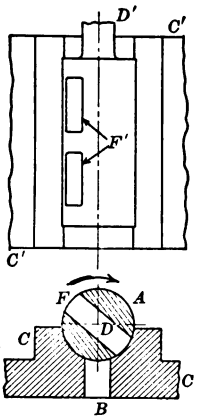

FIG. 67.—CYLINDRICAL SURFACE VALVE

ROCKING AND ROTATING VALVES

which simply turn about an axis:

Cylindrical Surface Valve, Fig. 67.
Cylindrical End Valve, Fig. 68.

Digitized by Google

Lifting Valves

which rise directly from the valve seat without any sliding action whatever. These valves are usually flat or crown-shaped and have a conical or annular seating surface, and they may lift vertically, as in the first case given below, or they may lift by swinging about an axis, as in the second case:

Poppet Valves, Fig. 69.

Butterfly Valves, Fig. 70.

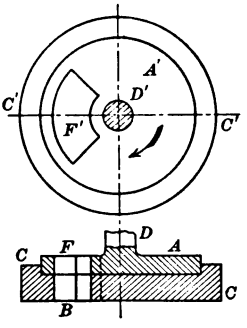

Fig. 68.—Cylindrical End Valve

117. Brief statements regarding the practical use of the above-mentioned types of valves will be given in the following paragraphs. Some of the forms which give excellent service in steam engines and steam turbines fail when applied to gasoline and oil engines, due to high temperatures and high pressures of the burning gases and to the deposits of carbon and foreign matter through imperfect combustion, all of which seriously affect smooth sliding surfaces.

Flat or D-Valve

118. The flat valve is the basis of the common D-valve and also of other forms of arched or cored valves, and of pressure-plate valves, all of which are widely used in steam-engine work. It is occasionally met with in some of the older forms of the internal combustion engine.

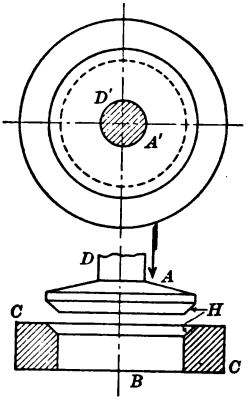

Fig. 69.—Poppet Valve

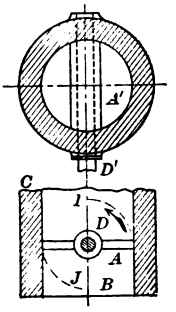

Fig. 70.—Butterfly Valve

Digitized by Google

Piston Valve

119. The piston valve, with but slight modification of the elementary form shown in Fig. 65, is largely used in steam engines. It has been tried from time to time in internal combustion engines, but in nearly all cases has been discarded.

Sleeve Valve

120. The sleeve-valve type is used principally in gasoline engines, where a second sleeve operates inside of the one shown at *A* in Fig. 66, and both moving sleeves surround the main piston of the engine and are within the cylinder wall casting. This type of sleeve valve is also known as the "silent Knight valve," and is further treated in Vol. II. It may also be noted that the elementary idea of the single-sleeve valve corresponds with a shell or hollow piston valve, and as such has been and is successfully applied in steam-engine practice, although it is there used in the steam chest instead of in the main cylinder.

Cylindrical Surface Valve

121. The cylindrical surface valve, Fig. 67, is widely known as the Corliss type of valve and is used in all makes of the well-known Corliss steam engine. In many cases only a part, say 90° or more of the cylindrical surface, is used, and an outside edge instead of a diametral port is used to control the steam admission and exhaust. This case will be illustrated later in Figs. 146 and 147, in treating of the subject of rotary valves. This cylindrical type of valve is also used on some steam engines which are not of the distinctly Corliss type, as illustrated in paragraph 228. In all of these cases the cylindrical valve has a rocking motion back and forth through an angle of less than 180°. The cylindrical valve, operated both as a rocking valve and as a continuously rotating valve, has been tried from time to time in gasoline engines, and, although its use has not been continued in most cases, there is a persistent effort running through manufacturing channels to overcome the difficulties involved in order to obtain the characteristic silent and balanced motion which this form of valve naturally gives. The difficulties here referred to arise principally from the high explosive temperatures causing either too tight a running fit, warping, or a leaky joint, scoring of surfaces due to high velocity of gases of combustion, deposits of foreign products of combustion, lubrication, etc.

Digitized by Google

Cylindrical End Valve

122. The cylindrical end valve has been tried often in both steam and internal combustion engines, but has generally failed, due principally to warping and leakage.

Poppet Valve

123. The poppet valve is largely used in several types of steam engines, as illustrated in Figs. 249 and 252; and is almost exclusively used in gasoline, gas, and oil engines. Its chief advantage is that no sliding action is involved in its use, and this outweighs, in internal combustion engine work, the disadvantages of its reciprocating motion at high speed, of warping when made in large sizes and when made in pairs on a single stem, and of noise when seating.

Butterfly Valve

124. The butterfly valve is not used where tight-fitting valves are essential, and it is, therefore, not to be considered as a means of doing the same kind of work as the valves previously mentioned. It has, however, a wide field of usefulness of its own in acting as a throttle in partially closing or opening passageways to the flow of steam and gas, and thus regulating the quantity passing through. A modification of the butterfly valve is the flap valve, which is hinged at one side, instead of across a diametral line, and which may also be used as a ready means of throttle by enclosing it in a chamber of suitable form; it is more useful, however, as an automatic check valve in permitting a liquid or gas to flow in one direction, but stopping it as soon as the direction of flow is reversed.

Digitized by Google

SECTION IV—FUNDAMENTAL VALVE-GEAR MECHANISMS

135. A complete valve-gear mechanism consists of a series of connected mechanical parts reaching from the engine shaft to the valve. These parts consist of eccentrics, cranks, rods, levers, links, cams, etc., in various forms of individual construction and, combined, they modify the circular motion of the engine shaft to give practically any desired motion to the valve or valves. A fundamental valve-gear mechanism is used here to mean a component group of these parts, or even a complete simple gear. It will be shown as the subject develops that the most complicated form of gear is made up, in nearly all cases, of a combination of the simple fundamental mechanisms shown in Figs. 81 to 93. These cover practically all forms of valve gears for steam engines and turbines and for gas, gasoline, and oil engines. There are six main groups with subdivisions in each, most of the subdivisions usually met with being also illustrated:

(*a*) Crank and Connecting Rod, Figs. 81–83.
(*b*) Eccentric and Eccentric Rod, Fig. 84.
(*c*) Double Rocker Arms, Fig. 85.
(*d*) Vibrating Rods, Figs. 86 and 87.
(*e*) Floating Levers and Links, Figs. 88–90.
(*f*) Cams, Figs. 91–93.

Infinite Connecting Rod

136. The crank and connecting-rod mechanism is the commonest of all forms of fundamental mechanism, although in valve-gear work particularly the eccentric-and-rod mechanism is more largely used. A form of crank and connecting rod that gives *uniformity of motion to the crosshead* is one generally referred to as the "infinite connecting rod," which means that a special form of rod is used, as in Fig. 81, which gives the same motion to the crosshead that a rod of infinite length would give. By "uniformity of motion" is meant that the crosshead reaches its highest velocity exactly at halfstroke, and that the rate of decrease on the second half of the stroke is exactly the reverse of the rate of increase on the first half. In this case, the crosshead travel at any phase, measured from the beginning of the stroke, is equal to the horizontally projected travel of

Digitized by Google

the crank pin. Under these conditions, the crosshead is said to have harmonic motion. For example, in Fig. 81, when the crank pin has turned through the arc $C'\ D'$ its projected travel is $C'\ D_2$, and the crosshead travel is $C\ D$, which is equal to $C'\ D_2$. It is of some importance to note that the crank-pin arc $F'\ G'$ equal to $D'\ C'$ and symmetrically placed, will give the same crosshead travel at $F\ G$ as at $C\ D$; also that the crosshead will travel through exactly one-half of its stroke while the crank pin turns through 90°. The "infinite" connecting rod as shown is of ⊤-form, and is guided so that the head of the ⊤ is always vertical. This form of rod is rarely used because of the excessive sliding of the crank pin or crank-pin box in the slot of the ⊤. This sliding would be equal to twice the diameter of the crank-pin circle during each cycle. The form is also awkward and is not adapted for heavy work. In cases where it is used, it is often referred to as a "Scottish yoke."

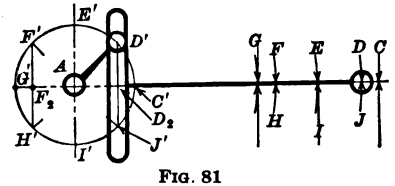

FIG. 81

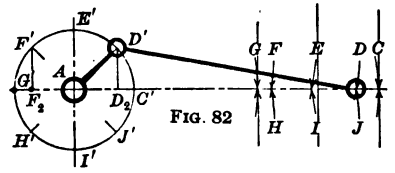

FIG. 82

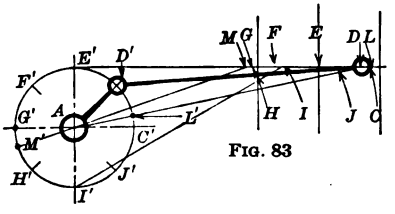

FIG. 83

FIG. 81.—"INFINITE" CONNECTING ROD
FIG. 82.—ORDINARY CRANK AND CONNECTING ROD
FIG. 83.—OFFSET CRANK AND CONNECTING ROD

The Common Form of Crank and Connecting Rod

137. This is simple in construction and permits of practical and direct thrust lines, thus adapting it to all classes of work, but it gives an irregular motion to the crosshead on the two halves of its stroke. This irregular motion is shown in Fig. 82, where the crosshead travel at the crank pin phase D' is $C\ D$ and is greater than $C'\ D_2$. When the crank pin moves through the equal symmetrical arc $F'\ G'$ the crosshead travel is $F\ G$, which is less than $F_2\ G'$ and also less than $D\ C$. Further, when the crank pin turns through the 90 degrees $C'\ A\ E'$, the crosshead moves the distance $C\ E$, which is greater than half the stroke; and when the crank pin moves the next 90 degrees $E'\ A\ G'$, the crosshead moves the distance $E\ G$, which is less than half the stroke. This irregularity causes the crosshead to have an unsymmetrical motion and varies the steam admis-

Digitized by Google

sion and exhaust with respect to the engine piston on its two strokes unless it is corrected by a balanced distortion at some other point in the valve gear, or by specially formed valves, etc. If it were not for the irregularity of motion in the common crank and connecting rod, the whole subject of valve gears for reciprocating steam engines would be very much simplified. In the purely valve-gear mechanism itself, as distinguished from the power mechanism, this irregularity does not count for much, as the length of the eccentric rod is usually very long, twenty to thirty times, in comparison with the eccentric radius. It is in the main crank and connecting rod that the trouble arises. There the rod is usually only from four to seven times as long as the crank, and with these proportions the crosshead travels

Forward Stroke	Distance Moved by Crosshead in Terms of Stroke				
	Connecting Rod Equals				
	Three Crank Lengths	Four Crank Lengths	Five Crank Lengths	Six Crank Lengths	Seven Crank Lengths
1st 90°	.586	.564	.550	.541	.535
2nd 90°	.414	.436	.450	.459	.465

are quite different in the successive 90° periods, as the accompanying table will show. This irregularity is often referred to as the effect of the "angularity of the connecting rod."

Offset Crank and Connecting Rod

138. If the common crank and connecting-rod mechanism is modified so that the line of crosshead travel does not pass through the center of the crank shaft, but to one side of it instead, the irregularity will be still further increased. Other characteristic actions will also follow such construction, and these, together with the irregularity, may prove to be of special advantage in some forms of engines, notably in single-acting steam and gas engines. For example, in Fig. 83, the line of crosshead travel $L\,M$ is offset so as to be tangent to the crank-pin circle. In this case, the crosshead pressure is transmitted to the crank pin with full crank leverage and to best possible mechanical advantage when the piston is at and near the center of its forward stroke. But on the return stroke the average angularity of the rod is high, a maximum being reached at $I'\,I$. The side components of pressure on the crosshead guide would also be high on the return stroke, and this renders it unsuitable

Digitized by Google

for double-acting engines. Even with single-acting engines, where this form of construction is used, it is customary to offset the crosshead only one-half the crank length, or less.

139. It is important to note not only the variable crosshead travel at the two ends of the stroke for equal symmetrical crank-pin periods in the case illustrated in Fig. 83, but also the fact that the length of the stroke itself, $L\,M$, is longer than the diameter of the crank-pin circle in the ratio of 2.00 to 2.07 for a connecting rod whose length is four times the crank. For longer rods the ratio would be lower and for shorter rods it would be higher.

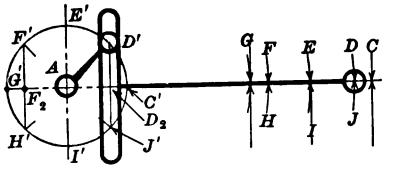

FIG. 81

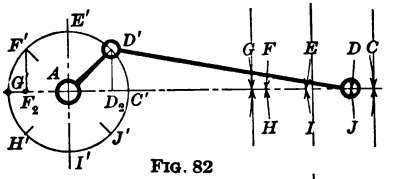

FIG. 82

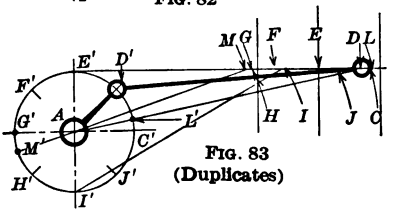

FIG. 83
(Duplicates)

FIG. 81.—"INFINITE" CONNECTING ROD
FIG. 82.—ORDINARY CRANK AND CONNECTING ROD
FIG. 83.—OFFSET CRANK AND CONNECTING ROD

The extreme points L and M of the stroke are obtained directly by taking a radius equal to l plus c, where l is the length of the connecting rod and c the length of the crank arm, and A as a center and drawing the arc L; similarly, taking l minus c as a radius and A as a center, and drawing the arc M. Upon drawing lines through $L\,A$ and $M\,A$ (extended) the points L' and M' are obtained and these are the crank-pin positions when the crosshead is at one end or the other of its stroke. It will now be apparent that the crank makes more than 180° (arc $L'\,E'\,M'$) while the crosshead goes through its forward stroke, and less than 180° (arc $M'\,I'\,L'$) while it goes through the return stroke.

The greatest angle which the connecting rod makes with the crosshead guide is $I'\,I\,E'$. This is readily seen to be so when it is considered that the connecting rod, at all phases, is a constant-length hypothenuse of a right-angle triangle, of which the crosshead guide line $L\,E'$ includes the altitude, and the perpendicular distance from the crank pin to the crosshead guide line is the base. Under these conditions the angle at the vertex will be greatest when the base of the triangle is greatest, and the greatest base length is the diameter of the crank-pin circle at $I'\,E'$.

Digitized by Google

The Eccentric and Rod

140. Although the eccentric is much different in appearance from a common crank arm, it is the exact equivalent of it, and gives precisely the same results. A crank arm can be used only at the end of a shaft while the eccentric may be placed anywhere along a shaft, and it is this feature that makes it a necessity in so many places, particularly in the design of prime-mover valve gears. An eccentric, with its essential parts, is shown in full and in section in Fig. 84. The circular disk $P\,Q$, having D' for its center, is the eccentric sheave. The eccentric ring $P\,R$ surrounds the sheave and the eccentric rod $U\,V\,D$ is fastened to the eccentric ring. With the eccentric sheave keyed to the shaft A, *and with the center line of the eccentric rod passing through the center of the eccentric sheave,* the point D' becomes a crank-pin equivalent, and $A\,D'$ a crank equivalent. Consequently, as D' moves in its circular path E', F', etc., the eccentric-rod end D moves back and forth a distance $C\,G$ equal to the diameter of the circle $C'\,G'$. The character of the motion of the crosshead is exactly the same as with the crank and finite connecting rod. The irregularity of motion resulting from the crank and connecting rod and from the eccentric and rod is sometimes neutralized, in part at least, by adding a bent rocker, which introduces a more or less compensating irregularity in the motions of the mechanism.

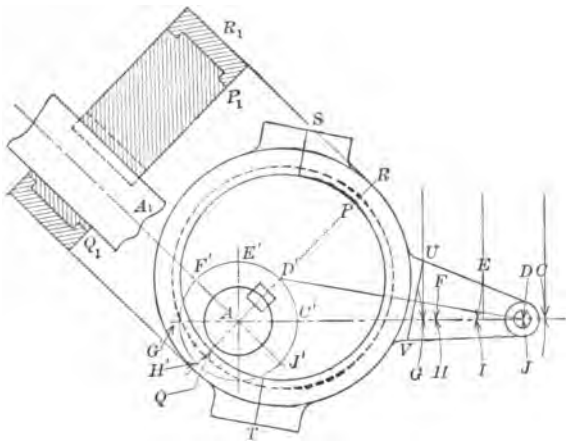

FIG. 84.—ECCENTRIC AND ROD

Double Rocker Arms

141. These are composed of two crank arms rigidly set at any given angle with each other. When the angle is zero and the crank arms are of different lengths, the rocker arms coincide and, as ordi-

Digitized by Google

narily used, they simply increase or decrease the original motion; when the angle is 180°, the direction of motion is reversed, and this reversal is accomplished with the same or different velocities, according to the lengths of the two arms. When the arms are set at any other angle than 0°, 90°, 180°, or 270° the device is known as a bent rocker, and this general case is illustrated at $E\ O\ E_2$ in Fig. 85. This latter case is largely used for the deliberate purpose of introducing an irregular motion to counteract some, at least, of the ill effects of another irregular motion, such, for example, as has been already described under the ordinary crank and connecting rod.

142. When the rocker arms are 0°, 90°, or 180° apart they do not change the character of motion if the links which are attached to the two arms are symmetrically placed; if they are not so placed, the motion will be distorted as it passes through the device. A great variety of distorted motions may be obtained in all forms of rocker arms by altering either the positions or lengths, or both, of the connecting links. An example of symmetrically placed links is shown in connection with the bell crank $E_3\ O\ E_4$ in Fig. 87, where the center line $E_2\ E_3$ of the connecting link positions is perpendicular to the center line $O\ M$ of the extreme rocker-arm positions. Similarly, the center-line position $N\ P$ of the outgoing link (not shown) is perpendicular to the center line $O\ Q$.

143. It should be noted in Fig. 87 that the center position $E_2\ E_3$ of the link $E_2\ E_3$ is not tangent to the arc $F_3\ J_3$, but that it intersects the arc in such a way that the middle point of the arc is as much to one side of the center position as the extremities of the arc are on the other side. This same principle is illustrated more clearly on a larger scale in Fig. 85, where the center line $A\ N$ of the connecting-link positions is such that $M\ Q = C\ N = G\ P$. When the connecting links are not symmetrically placed with respect to each other as just described, even the 0°, 90°, and 180° rocker arms will introduce an irregularity into the transmitted motion; and when they are not symmetrically placed in the general case of the bent rocker, an irregularity will be introduced in addition to the one already referred to in paragraph 141.

144. An application of the bent rocker for rectifying the error introduced by the ordinary crank and connecting rod is shown in Fig. 85. It must be understood that the bent rocker is not intended to rectify for all phases but simply for one or two important phases, even though some of the other phases may be further distorted by the device. As an example, suppose that it is necessary to make the distances $C_3\ D_3$ and $F_3\ G_3$ of the crosshead stroke, Fig. 85, equal,

Digitized by Google

or as nearly so as possible. Draw the crank $A\,E'$ and connecting link $E'\,E$, attaching E to a rocker arm $O\,E$, which is set off center by a small angle such as $M\,O\,E$. Draw the other arm $O\,E_2$ of the bent rocker on the center line, and attach to it the follower link $E_2\,E_3$. If now the positions of the mechanism for C', D', etc., are marked off it will be found that the spaces $C_3\,D_3$ and $F_3\,G_3$ are more nearly equal than they were in the ordinary crank and connecting-rod device of Fig. 82, and that they approach the equality shown by the infinite connecting rod in Fig. 81. In obtaining this approach to equality of motion other features have been sacrificed. For example, the crosshead travel is much greater during the first 90°, $C'\,E'$, of the main crank, than it is during the second 90°, as may be seen by comparing $C_3\,E_3$ with $E_3\,G_3$. The degrees of equality and distortion obtained by the use of bent rockers must generally be a compromise obtained by varying the lengths and angles of the several parts of the mechanism.

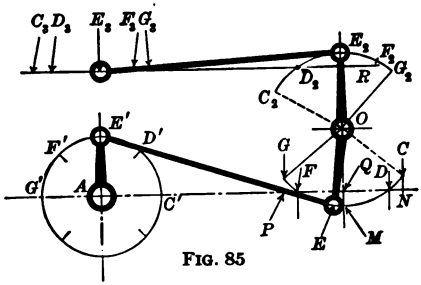

FIG. 85

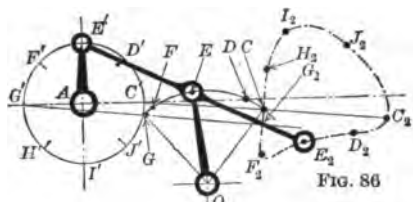

FIG. 86

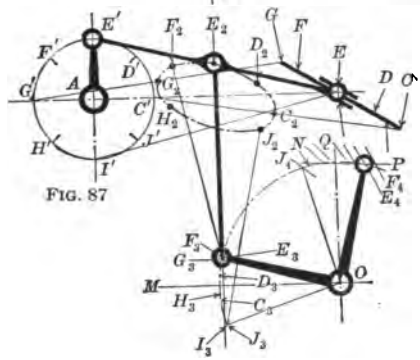

FIG. 87

FIG. 85.—DOUBLE BENT ROCKER ARMS
FIG. 86.—VIBRATING ROD
FIG. 87.—VIBRATING ROD AND BELL CRANK

The Vibrating Rod

145. This device is a modification of the ordinary connecting rod in which some point of the rod, not necessarily the extremity, is constrained to move in some definite path, while the follower, or desired motion, is taken from some other point on the rod. Two characteristic cases are illustrated in Figs. 86 and 87. In both, $A\,E'$ is the crank and $E'\,E\,E_2$ the vibrating rod. The desired motion is taken off at the point E_2 through a connecting link which is shown

Digitized by Google

in Fig. 87 at E_2 E_3. This link may be guided at its outer end E_3 by a swinging arm, as shown in the illustration, or it may be guided by crosshead guides in a straight line.

146. For the purpose of changing the direction of the desired motion which is from F_3 to J_3, a bell crank E_3 OE_4 is introduced in Fig. 87, where the divisions from F_4 to J_4 are exactly the same as those between F_3 and J_3, the angle between points marked by the same letter being 90° in each case. In both Figs. 86 and 87, E_2 F_2 G_2, etc., is the path of the point E_2. It may be seen from Fig. 86 that if a vertical connecting rod is attached to the vibrating rod at E_2 it will move an object but slightly, while E_2 travels from C_2 to F_2, and that it will give considerable motion while E_2 travels from F_2 to I_2 and back to C_2; and in Fig. 87 that the resultant motion of E_2 is a fairly symmetrical one as compared with Fig. 86.

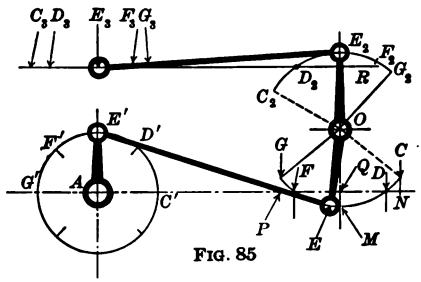

FIG. 85

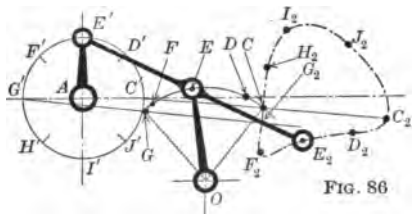

FIG. 86

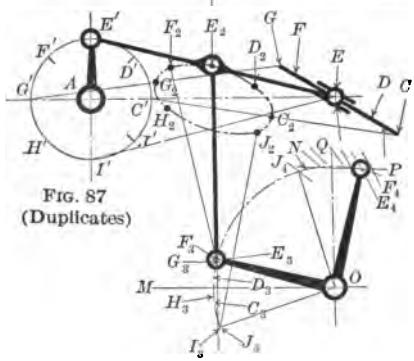

FIG. 87
(Duplicates)

FIG. 85.—DOUBLE BENT ROCKER ARMS
FIG. 86.—VIBRATING ROD
FIG. 87.—VIBRATING ROD AND BELL CRANK

The Floating Lever

147. This is a bar or lever, usually straight, with three rods attached at different points. The bar is shown at A C in Figs. 88 and 89, and the rods at A P, B Q, and C R. These latter may be described as the driving rod, the fulcrum rod, and the driven rod, according to the nature of their action. In some applications of the floating lever, as in Fig. 88, the fulcrum and driving rods exchange offices during a single cycle of operation, while in other applications, as in Fig. 89, the rod C R remains the fulcrum rod all of the time.

Digitized by Google

148. The operation of the floating lever $A\ C$ in Fig. 88 is as follows: Rod $B\ Q$ moves B to B' about A, which is temporarily held by bar $A\ P$, C thus being driven to C'. It is assumed that all three points of the floating lever have parallel straight-line motions for simplicity in explanation, although in the practical lever the lengths $A\ C$, $A\ C'$, $A'\ C_2$, etc., must be constant, and two of the three points must move in curved paths. In actual construction of the rod, for example, $C\ R$ moves back and forth in a straight-line path, while the other two bars are jointed at their far ends so as to permit the points A and B to swing in such curved paths as may be necessary. In ordinary design work these curved paths may be disregarded, especially where the lever is long and the angular motion small, as is usually the case. A is next moved to A' while B' is held stationary, and C' is thus moved back to C, leaving the bar in the position $A'\ C$. B' is next moved to B, while A' is held stationary, thus driving C to C_2; and finally A' is moved to A about B as the fulcrum while C_2 moves to C and the bar returns to its original position $A\ C$.

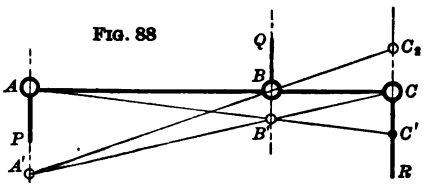

FIG. 88.

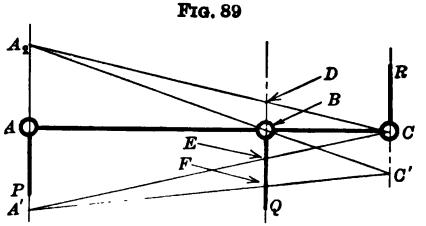

FIG. 89.

FIG. 88.—FLOATING LEVER WITH CHANGEABLE FULCRUM POINTS
FIG. 89.—FLOATING LEVER WITH SINGLE FULCRUM POINT

149. The floating lever in Fig. 89 uses the rod $R\ C$ as a fulcrum all the time, the construction being such that the point C can be moved to and maintained in any position between C and C'. The driving rod $P\ A$ moves up and down between the points A' and A_2, thus compelling the driven rod $Q\ B$ to move up and down between the points E and D when the fulcrum is at C and between the points F and B when the fulcrum is at C'.

The Link

150. This is a form of the floating lever and is generally referred to simply as a "link" in valve-gear mechanism, and the motion it gives as the "link motion." It is illustrated at $D\ J_2$ in Fig. 90. The link here shown is a straight one, because it simplifies the illustration, but in practice it is generally curved. It makes no difference whether a curved or straight link is used in studying the action of

Digitized by Google

the mechanism, except, at a later stage, a template must be made to conform with the link, but this template, whatever its form, is used in precisely the same manner in all cases.

A "link" has three pins attached to it, but sometimes one of the pins is stationary. In the latter case, the link is nothing more than a bent rocker with curved arms. The most general case of a link, however, is one in which all three points are movable back and forth, as shown in Fig. 90. In this figure the rods $D'D$ and $J'J_2$, operating the link, are also shown, and so is the suspension rod $O\ P$, in order that the mechanism may be properly studied. If the shaft A is the driving member, it will be seen that as it turns in the direction shown by the arrow, the point D of the link will be drawn to the left, and when D' is at F', D will be somewhere on the circular arc at F which has F' for a center and $D'D$ for a radius. Similarly, at the same instant, the point J_2 will be somewhere on an arc passing through D_2, and finally the suspension point O of the link will be somewhere on the arc $O\,O_4$, which has the point P for its center. In general, the rods $D'D$ and $J'J_2$ are eccentric rods and are equal in length.

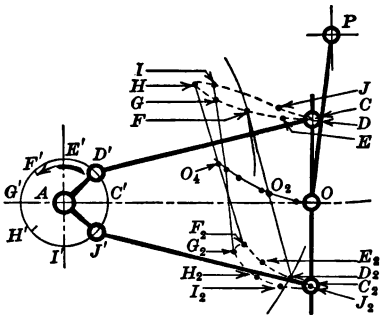

FIG. 90.—LINK MOTION

From the above it has been found that the three points D, J_2 and O of the link will lie on the three arcs passing through F, D_2 and O at the phase under consideration, and all that is necessary to do now is to mark off the three points on the straight edge of a card or a piece of paper, and adjust the paper so that the marked points fall on the new arcs. When the card is so adjusted the straight line $F\,D_2$ may be drawn as the position of the link at the given phase. In the same way other positions of the link may be found and the loci $D\,E\,H\,C$ and $J_2\,D_2\,G_2\,H_2$ of the extremities of the link determined.

Cams

151. Cams are largely used in valve-gear mechanisms, particularly in connection with the lifting or poppet type of valve. Cams are useful in mechanism generally, because they will produce more varied motion than will combinations of arms, links, etc. This is

Digitized by Google

particularly true where there are irregular periods of rest, and where definite varied velocities of the follower are desired.

152. An example of cam motion is shown in Fig. 91, where it is desired to move the bar $B\,M$ through the distance $M\,N$ while the shaft A turns through the angle $B\,A\,E$, and then to move it back again, or rather, permit it to be moved back again by a spring, while the shaft turns through the angle $E\,A\,J$. If this were all that was required it would only be necessary to assume a distance $A\,H$, make the distance $A\,I$ equal to $A\,H$ plus $M\,N$, connect the points H and I with a smooth curve, do the same with the points I and J, and the cam would be completed.

153. In addition to the requirements given above, it might be desirable to have the rod $B\,M$ start its stroke with uniform acceleration and finish it with uniform retardation, thus giving the same gentle action at both ends of the stroke as is given by gravity to a falling body that starts from rest. It might also be desired that the pressure angle between the cam and the follower should not exceed 30°. The pressure angle is the angle between the line of action $B\,N$ of the follower and the normal to the pitch surface of the cam, and in general it varies from instant to instant. When P is at C the pressure angle will be $R\,P\,Q$, $P\,R$ corresponding to the line of action and $P\,Q$ being the normal to the pitch surface $B\,P\,E$, etc. In order that this varying angle may never exceed 30° when it is desired to move the follower with uniform acceleration and retardation, it will be necessary to compute the pitch radius $A\,C$ by the following formula:

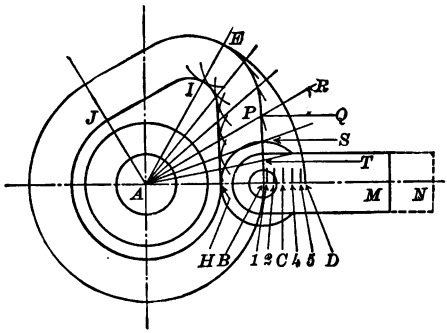

FIG. 91.—RADIAL CAM

$$A\,C = \frac{M\,N \times 3.46 \times 360}{6.28 \times \text{angle } C\,A\,E \text{ in degrees}} = \frac{198\,M\,N}{\text{Angle } C\,A\,E \text{ in degrees}}$$

If some other maximum pressure angle is desired, the following values should be used instead of 3.46 in the above formula: 5.50 for 20°, 2.38 for 40° and 1.68 for 50°. The total distance $M\,N$ should be divided into two equal parts and laid off on each side of C as at $C\,B$ and $C\,D$.

Digitized by Google

154. To obtain uniform acceleration and retardation at starting and stopping, in this illustration, three construction points will be used. Divide $B\,C$ into three *unequal* parts which are to each other as 1, 3, 5, as at B–1, 1–2, 2–C. The easiest way to do this is to divide $B\,C$ into nine equal parts, and then take the first, fourth, and ninth points. Next divide the angle $C\,A\,P$ into three *equal* parts, as at $A\,T$, $A\,S$, and $A\,P$, and swing the points 1, 2, and C about A as a center until they fall at T, S, and P respectively. The curve $B\,P$ through these points will then be the pitch surface of the cam, and if a roller of radius $B\,H$ is assumed and a series of arcs drawn with T, S, and P as centers, they will serve as guides in drawing the envelope curve $H\,I$ which is the working surface of the cam. If four construction points instead of three had been desired, $B\,C$ would have been divided into sixteen equal parts, and the first, fourth, ninth, and sixteenth points taken, and the angle $C\,A\,P$ would have been divided into 4 equal parts. If six construction points had been desired, $B\,C$ would have been divided into thirty-six parts, etc. The pitch surface $P\,E$, which gives the retardation, is constructed in exactly the same manner as $B\,P$, but in the reverse order.

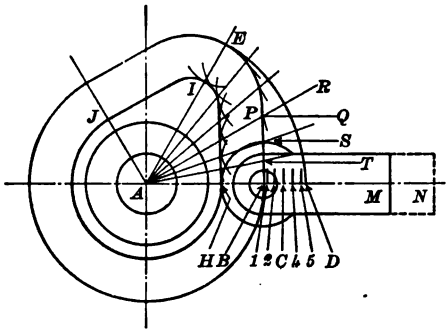

FIG. 91 (Duplicate).—RADIAL CAM

155. Another form of cam motion is known as the "toe-and-wiper," illustrated in Fig. 92, where $B\,E$ is the toe and $B\,D$ the wiper. The wiper is the driver, and as it turns through the angle $B\,A\,C'$ it lifts the toe from $B\,E$ to $C\,D'$ by a sliding action which results in bringing the points D and E together at D'. Usually the lift $B\,C$ and the driving angle $B\,A\,C'$ are assigned. To draw the wiper curve, revolve C to C' and draw $C'\,D$ perpendicular to $A\,C'$. Any smooth curve tangent to $B\,E$ and $C'\,D$ will then answer for the working surface of the wiper. Note the point D where the curve is tangent to $C'\,D$, for this distance is the necessary length for the toe and $C\,D'$ is made equal to it.

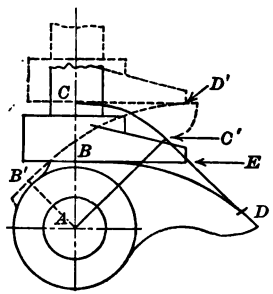

FIG. 92.—TOE-AND-WIPER CAM

Digitized by Google

156. If it were desired to make the toe lift with some special velocity, as, for example, uniform velocity, it would be necessary to divide $B\,C$ into, say, four equal parts, and to revolve the division points to corresponding radial lines which divide the angle $C\,A\,C'$ into four equal parts, the operation being the same for each of the four points as that illustrated at $C\,C'$. Then at each of the revolved points perpendiculars similar to $C'\,D$ would be drawn and the wiper curve would have to be tangent to each of these perpendicular lines in turn. It very often happens, when definite velocities for the toe are assigned, that one perpendicular is entirely cut out by the perpendiculars on each side, and then it is impossible to draw a smooth envelope curve to all the perpendiculars, and the problem is then impossible, and can only be solved by permitting variable velocity or by changing the data.

157. The mushroom cam is constructed in the same general way as the toe-and-wiper cam, the only difference being that the driver cam turns through a complete revolution in the former case, while it only oscillates in the latter.

158. Wiper cams with oscillating followers are also used under the name of "Rolling Cams" in valve-gear mechanisms, and the method of construction is sufficiently distinct to warrant the special illustration which is shown in Fig. 93. Let it be desired to move the follower rod $F\,L$ through the distance $F\,G$ while the driver or wiper cam turns through the angle $K\,A\,K'$. Draw the follower arm in suitable proportions, as at $E\,D\,C$, making the indefinite follower surface $C\,D\,H$ a straight one which oscillates about E. At F a crown surface is shaped on the follower arm $E\,C$ so that it will work against the flat surface of the rod $F\,L$. The arm $A\,K$ is moved back and forth through the arc $K\,K'$ by the rod $K\,J$, which is usually operated by an eccentric. Redraw the follower arm with its straight working edge in the highest position at $C'\,D'\,H'$. Revolve E to E_2 about A through an angle equal to $K'\,A\,K$, and draw an arc with $E_2\,H_2$ as a radius. Also draw an arc $N\,P$ tangent to $H'\,C'$ with A as a center. Draw the line $H_2\,N'$ tangent to these two arcs. Then a smooth curve $C\,B$ drawn tangent to the two lines $H\,C$ and $H_2\,N'$ will give the work-

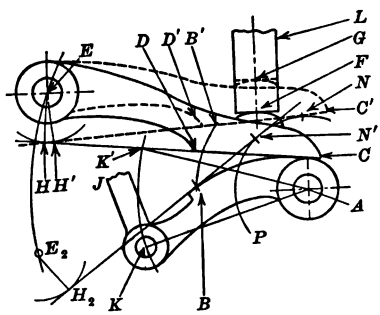

FIG. 93.—"ROLLING" CAM

Digitized by Google

ing contour of the wiper cam that will lift the oscillating follower and, through it, the follower rod $F\,L$ in the desired time.

159. The above method of construction simply provides for lifting the rod in the desired time independently of the lifting velocities. If it is desired, in addition, to give $F\,L$ a definite motion, as, for example, a uniform velocity, the distance $F\,G$ would be divided into a number of equal parts, and the corresponding positions of $H\,C$ drawn as was $H'\,C'$. Then the arc $K\,K'$ should be divided into the same number of equal parts if the arm $A\,K$ has uniform angular velocity; but if it is driven from an eccentric, as it usually is, the proper eccentric circle arc must be divided into equal parts and the division points carried through the rod $J\,K$ to the arc $K\,K'$. Then E will be moved down successively through angles measured by the divided arcs on $K'K$ and the new positions of $H\,C$ drawn just as the position $H_2\,N'$ was drawn. In this way there will be several intermediate lines between $H\,C$ and $H_2\,N'$ to which the arc forming the wiper surface must be drawn tangent. When it is so drawn it will lift the rod $R\,L$ with the desired uniform velocity. If variable lifting velocity is desired the distance $F\,G$ must be divided originally into unequal parts depending on the desired variable velocity, as was done in the cam shown in Fig. 91. The rest of the procedure will then be along the same general plan as already described. It frequently happens in cams of this type, as in the toe-and-wiper cam of Fig. 91, that a smooth curve can not be drawn tangent to all the intermediate construction lines between $H\,C$ and $H_2\,N'$ when special intermediate velocities are desired for the follower rod $F\,L$, and in such cases sacrifices must be made in either the desired velocity or in the form of the follower which may be curved, instead of straight as shown at $H\,C$. If the surface $C\,D\,H$ had been curved, its new position as at $H_2\,N'$ would have been drawn in the same general way, using a corresponding specially formed curved template instead of a straight edge. Whether or not there is pure rolling between the surfaces of so-called rolling cams is often a question, and the determination of the cam curves that will give pure rolling involves a special study of the subject. The general subject covering the details of the construction principles on a wide variety of cams is too comprehensive to be included in a work on valve gears, but it may be found in a more or less complete form in some of the works devoted solely to the subject of cams.

Digitized by Google

Trip Mechanisms

160. A trip mechanism which makes use of a cam projection *E R* on the cam piece *F G* is widely used in some classes of valve gears. It is sufficient, in studying fundamental valve-gear mechanism, to consider the cam piece *F G*, in Fig. 94, as rigidly attached to the bracket carrying the stem *A*, although in its usual application it is free to oscillate on the stem *A* and its position is under the control of a governor. The arm *A H D* oscillates freely on the stem *A* through an arc measured by $D_2 D'$, and is operated through the rod *D M* from an eccentric on the engine shaft. Swinging from the pin *D* on this arm is a hook with two finger-like extensions, one, *D L*, sliding on the surface *G R* until it meets the cam projection *R E*, when it is turned to the left, and the other finger, *D K*, is swung over so as to disengage the catch at *B*. At this instant the arm *A B*, which is keyed to the stem *A*, drops and turns the valve stem *A*. In order to secure rapid falling of the arm *A B* a dashpot is used as represented at *J J'*, a partial vacuum being formed under the piston *J* as it is lifted, which means that a large part of the normal atmospheric pressure of about 15 pounds per square inch is available in addition to gravity in quickly forcing the piston down.

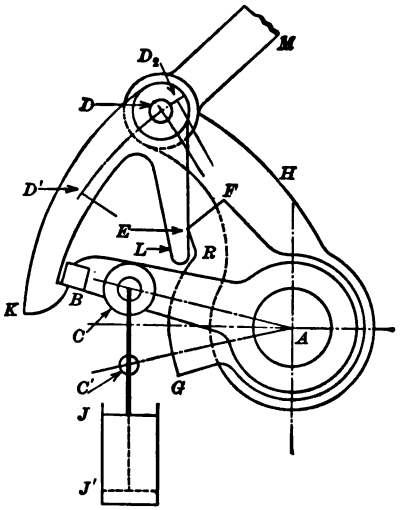

FIG. 94.—TRIP MECHANISM

GOVERNORS

161. The governor is an essential part of the valve gear of all self-governing engines and turbines, and the several fundamental mechanisms will now be pointed out. In all cases, governors include a movable weight or weights operated directly or indirectly from the engine mainshaft, the centrifugal force or inertia, or both, being resisted by a spring or by gravity, and finally balanced when the engine reaches its normal speed.

162. Governors control the engine speed in two general ways,

Digitized by Google

either by increasing or reducing the period of the valve opening when they are called automatic cut-off governors, or by simply reducing the area of the valve opening, when they are called throttling governors. All governors, however, do not act wholly in either of these ways; some combine the features of both.

Fly-ball or Pendulum Governors

163. Governors may be grouped as fly-ball or pendulum governors or as shaft governors. Several of the former type are shown in Figs. 95–97. In each of the illustrations the spindle *A* receives a rotary motion from the mainshaft. The governor weights *C* are pivoted to arms on the rotary spindle at *B*, and as they fly out by centrifugal force, pull up or press on the collar *J K*, which is free to move up or down. This collar, of course, rotates at the same speed as the spindle,

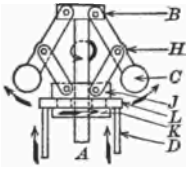

FIG. 95

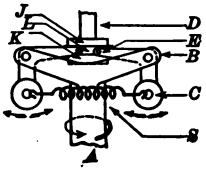

FIG. 96

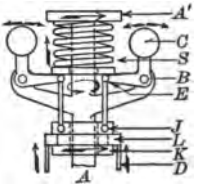

FIG. 97

FIGS. 95–97.—FLY-BALL GOVERNORS

but it has in it a circular groove in which fits a ring *L*. The ring, however, is not permitted to turn, but it is constrained to move only up and down with the collar, and thus it transmits a straight-line motion to the valve through the rods *D*. Usually springs such as are shown at *S*, or a weight represented by the collar *J K* and sometimes an additional weight placed on and just above the collar, are adjusted to balance the centrifugal force or inertia of the weights when the engines reach the desired speed.

Shaft Governors

164. Shaft governors, showing three principles of action, are illustrated in Figs. 98–100. A paper read by Mr. F. H. Ball before the American Society of Mechanical Engineers (see Transactions A. S. M. E., Vol. XVIII, page 290) shows three forces available in shaft-governor construction, as follows:

1. Centrifugal force (Fig. 98).
2. Tangential accelerating force (Fig. 99).
3. Angular accelerating force (Fig. 100).

Digitized by Google

Each of the figures represents the section of an engine flywheel to which a weight C is attached by a pin at B. An arm $B\,E$ is connected to the weight arm and at the point E a rod $E\,D$ is attached, which goes to and connects with the valve stem.

165. The action due to centrifugal force is shown in Fig. 98. With the mechanism in the position shown, the pin E will revolve in the circle $E\,G$ and the valve will be moved back and forth each cycle a distance equal to the diameter of the circle. If the speed of the flywheel increases, the weight C will move out, say to C', by centrifugal force, and carry the pin E to E', when the valve travel will be reduced to the diameter of the circle $E'\,F$. It should be specially noted that the action due to centrifugal force depends on the *rate of rotation* only.

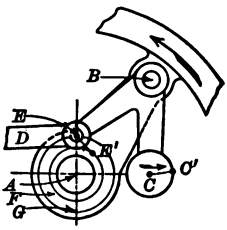

FIG. 98.—CENTRIFUGAL SHAFT GOVERNOR

166. The action due to tangential accelerating force is shown in Fig. 99. With the mechanism in the position indicated the valve travel is equal to the diameter of the circle $E\,G$. Since the center of the weight C is on a radial line through the pivot pin B, centrifugal force, although acting on the pin, can not rotate the governor weight. But if the engine suddenly increases in speed the inertia of the governor weight will cause it instantly to drop back relatively to the fly-wheel and the point E will rotate towards E', thus reducing the valve travel from, say, $E\,G$ to $E'\,F$. Similarly, if the engine decreases in speed the inertia of the governor weight will carry it forward relatively to the wheel, and E will move out and increase the valve travel. It should be specially noted that the action due to tangential accelerating force depends on *rate of change of rotation* only.

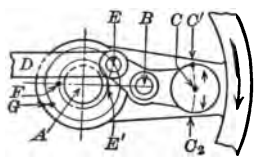

FIG. 99.—TANGENTIAL ACCELERATING SHAFT GOVERNOR

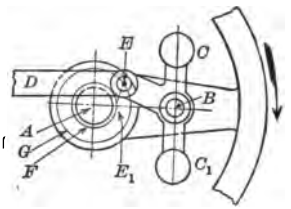

FIG. 100.—ANGULAR ACCELERATING SHAFT GOVERNOR

167. The action due to angular accelerating force is represented in Fig. 100. In this case the governor weight is a distributed, balanced mass, neglecting the arm $B\,E$, and as the flywheel rotates this mass tends to keep its original direction of position, and in so doing exerts

Digitized by Google

an effort to turn on the pin B and move the point E towards E_1, and so decrease the valve travel. The greater the speed of the engine, the greater will be the rotative effort of the balanced mass.

168. It rarely happens that any one of the above three forces alone controls the governor action, except, perhaps, the centrifugal force, but in nearly all cases these three forces are combined either deliberately or unavoidably to secure a desired valve control under the conditions on which the engine operates. Governors in which action of centrifugal force is not used, or is relatively small, are sometimes called inertia governors.

169. With an understanding of the fundamental valves and valve-gear mechanisms described in the preceding pages, it will be found that practically all applied valves and valve gears consist in simple or multiple application of these fundamental features.

Digitized by Google

SECTION V—PRACTICAL TYPES OF VALVES FOR RECIPROCATING STEAM ENGINES

180. Valves for steam engines are made in practice in many different forms and details of construction. The live-steam pressure, the power, the speed, the nature of the load, and structural arrangements all affect the consideration of the general valve form, and some combinations of these items permit of simple constructions, while other combinations require more complex forms. Only a few of the practical applications of steam-engine valves can be illustrated in a work of this kind, and those that are shown in the following paragraphs are selected because they are typical of other varied forms, or because they are specially well known or widely used. In presenting the valve illustrations, the order of grouping given below will be followed as nearly as is practicable:

Reciprocating valves,

- Flat or "D" unbalanced valves, as already shown in Drafting-Table Problems 1 and 2, paragraphs 56 and 78.
- Piston valves, which are balanced by the nature of their form.
- Pressure-plate valves, which are balanced by special forms of adjustable plates, or by fixed plates and packing strips or bars.
- Auxiliary, "cut-off" or "riding" valves, which are usually "flat" valves built in two or more separate parts, each part being operated by separate valve gear.

Multiple valves.

Rocking or Rotating valves.

Lifting valves.

Piston Valves

181. The piston valve as applied to a small, high-speed engine is illustrated in transverse and longitudinal sectional views in Figs. 111 and 112. The valve itself V is composed of a single iron casting, properly machined, and is the simplest form of balanced valve, due to the fact that the steam that enters the cored opening P exerts its pressure radially in all directions and, therefore, does not press the round valve against the valve-seat bushing N on any one side or place. In some cases, small piston valves are made solid without

Digitized by Google

any cored space whatever, in which case steam pressure is exerted only on the two ends of the valve and there is no radial pressure at all.

182. For purposes of computation the piston valve may be considered as an ordinary D-valve with its plane surface and also the rectangular steam ports rolled into cylindrical form. The area of the steam port is computed in the same manner as in Drafting-Table Problem No. 1, and is usually first laid out in rectangular form, as shown in Fig. 113. Piston valves tend to wear the original circular opening in which they slide into a more or less oval form, and they are not usually designed, therefore, to slide in direct contact with

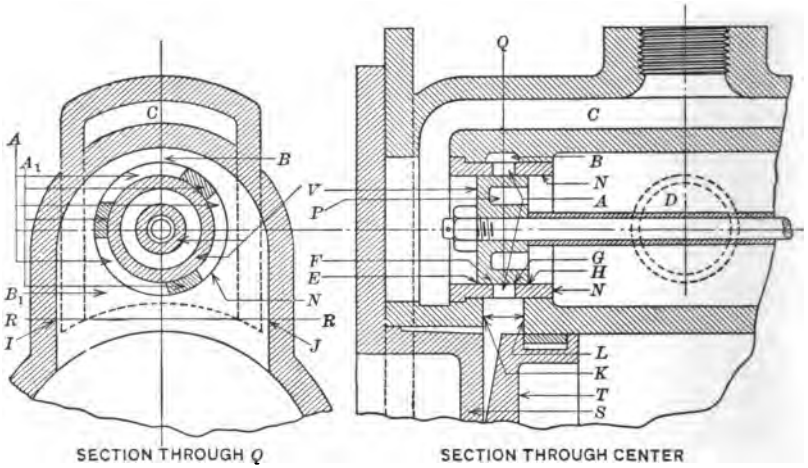

FIG. 111 FIG. 112

FIGS. 111 AND 112.—TRANSVERSE AND LONGITUDINAL SECTIONS OF PISTON VALVE, STEAM CHEST, AND CYLINDER

the surface of the engine cylinder casting, but are designed to slide on a valve-liner or bushing which may be readily replaced when worn. Such a liner is shown at N, in Figs. 111 and 112, and in its unrolled or rectangular form at $N\,N$ in Fig. 113. Since the liner can not be separated on the two sides of the port-width opening, owing to the absolute necessity of preserving constant port width and of providing retaining surfaces where loose or split packing rings are used around the piston valve, it is necessary to allow bridges in the liner connecting the two parts as shown at A_1, A_1, A_1, in Figs. 111 and 113. After the port area is computed, a width of port A, Figs. 112 and 113, must be selected, and the necessary free length $(A + A + A)$, Fig. 113, is then found. To this length must be added

Digitized by Google

the distance taken by the bridges ($A_1 + A_1 + A_1$) to determine the total developed length $N\,N$ of the valve liner. The width of the liner should be such that the valve will slightly over-travel each edge when in its extreme positions. The number of bridges and the width of bridges is a matter of judgment, and where rings are used on the valves, more bridges are used, and they are usually placed diagonally instead of square across the ports. The length of the developed liner is always specified as equal to its inside circumference, or to the valve circumference, when rolled up. In selecting the width of port, as directed above, it should be noted that the greater the selected width the smaller will be the diameter of the piston valve and the greater will be the valve travel and the eccentric. The developed port openings and bridges, together with methods of dimensioning, and notation for a practical case, are shown in Fig. 114. The head-end liner is made 8¼ inches inside diameter, and the crank end liner 8 inches, to allow valves to be readily assembled.

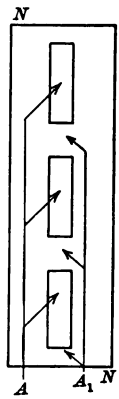

FIG. 113.—DEVELOPED PISTON VALVE SEAT

183. The computation for the steam and exhaust port areas in the engine cylinder casting are based on steam passing in and out of a cylindrical opening, and, therefore, the port must pass completely around the liner. The top of the port is shown at B, and its area may equal the top area at A, Fig. 112, although no steam is required to pass through this section. Obviously the steam starting from the top will divide itself and pass

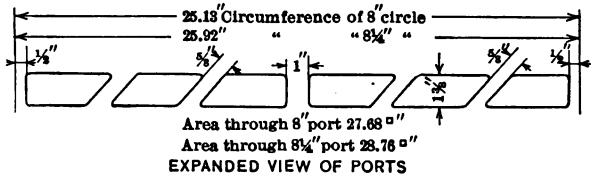

FIG. 114.—PRACTICAL LAYOUT FOR PISTON VALVE

to the two sides and the port area should be an expanding one as shown in Fig. 111, until it reaches a maximum on the section R, where the area $I\,J \times K\,L$ must equal at least the free port area in the liner as based on exhaust-steam flow. The width $K\,L$ of the cylinder port may be taken equal to or greater than liner port-width, the only effect being to change the dimension $I\,J$ and the

Digitized by Google

cylinder casting proportions slightly. In Fig. 112, *C* is the live-steam and *D* the exhaust-steam passage, and *E F* the steam and *G H* the exhaust laps respectively. The main or engine piston is shown at *T*, and the engine cylinder head at *S*.

184. The principal advantages of the piston valve are: First, that it is balanced, except for its weight; second, that the valves are at the ends of the cylinder, giving short steam ports, and thus minimizing condensation; third, that when used on the high-pressure cylinders of multiple-expansion engines, steam may be admitted from the inside, or center, and exhausted on the outside of the valve, thus keeping the high pressure and temperature of the live steam away from the stuffing-box. When so used *D*, Fig. 112, would become the live-steam, and *C* the exhaust-steam openings; *H G* would be the steam lap, and *E F* the exhaust lap.

The disadvantages are: First, in solid piston valves that the valve is apt to bind on the sleeve if a too tight fit is made, especially when starting up the engine, due to unequal expansion of the valve and valve casing; and if too loose, steam will leak through. Delicate designing and machining, both as to sizes and forms of valve and cylinder casing, are essential. Second, piston valves do not permit of relief from compression due to water that may be trapped in the engine cylinder, as do flat valves which are usually designed to lift from the valve seat if necessary. Relief in such cases can only be obtained by leakage past the valve or by equipping the cylinder with a special relief valve. Third, wear in the valve seat produces an oval casing, allowing leakage, but such wear may be provided against by supporting the piston valve at the two ends, instead of at the valve stem stuffing-box only, which latter is the common method.

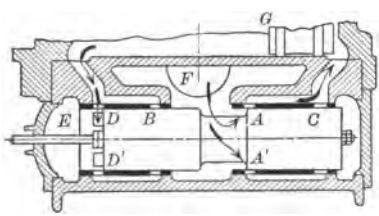

FIG. 115.—"IDEAL" SOLID PISTON VALVE

185. A solid piston valve with separate live- and exhaust-steam ports as used on the "Ideal" engine, is shown in Fig. 115. The engine piston is shown on dead-center head-end at *G* and the valve is in the corresponding position, showing the live-steam port openings *A A'* in the valve liner to be uncovered by a small amount equal to the lead. Steam is admitted internally, the steam pipe being indicated at *F*. The exhaust port is shown quite fully open at *D D'*, the exhaust pipe being beyond *E*.

186. Piston valves may be single- or double-ported, the same as

Digitized by Google

flat valves. Fig. 116 shows a solid type of piston valve with double admission ports similar to the Allen valve. It will be noted how the steam-chest walls at A and B are cored to facilitate uniform heating and cooling of the valve, valve liner, and adjacent steam-chest wall.

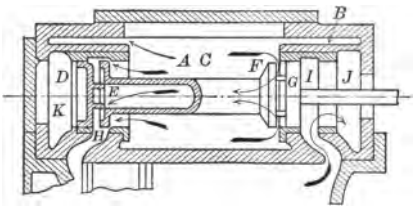

FIG. 116.—DOUBLE ADMISSION PISTON VALVE

187. When packing rings are used on piston valves to keep them tight, spring rings or adjustable rings are employed. Spring rings such as are shown by the small black square spots in Fig. 123 must necessarily be thin, and have a small pressure on the valve-seat to avoid excessive friction and wear, and they are liable to break, not only during service, but when being expanded to snap into place. Adjustable packing rings, which are set to any one position or diameter, must be carefully handled, or they will bind and strip the valve gear. When spring or adjustable packing rings are used, the steam and exhaust laps are

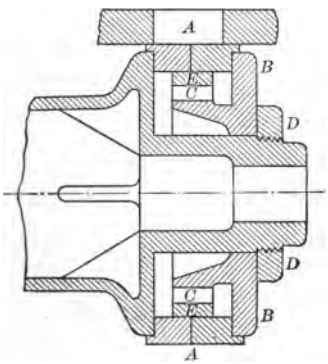

FIG. 117

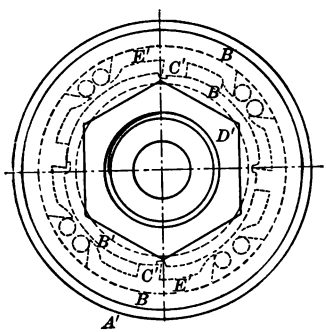

FIG. 118

FIGS. 117 AND 118.—LONGITUDINAL SECTION AND END VIEW OF "IDEAL" PISTON VALVE WITH ADJUSTABLE PACKING RINGS

measured from *the edges of the ring, or rings, to the edges of the port,* instead of from the edges of the valve casting.

188. A piston valve with adjustable rings is shown in Figs. 117 and 118. It is one of the types used on the "Ideal" engine. The adjustable rings A and A' are turned accurately to the bore of the bushing and then split across to permit of expansion when the head B B' is turned, so that the cam surfaces between B' and C' press

Digitized by Google

radially on the shoes E, and these in turn on the rings A. Holes for a spanner wrench are drilled in B, but are omitted in the illustration.

189. Another type of piston valve with double ports and adjustable packing ring as used on the Fitchburg engine is shown in Fig.

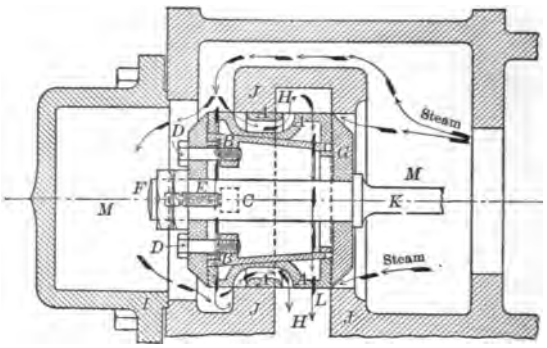

FIG. 119.—"FITCHBURG" DOUBLE-PORTED ADJUSTABLE PISTON VALVE

119. Four of these valves are used on the engine, the two live-steam valves being operated by cam wrist plates, as shown at A and B in Fig. 120, and the two exhaust valves which are solid, by a separate eccentric. The live-steam valve for the head-end port is shown in detail in Fig. 119, and diagrammatically at C, in Fig. 120. The exhaust valve is shown at D. The action of the valve and method

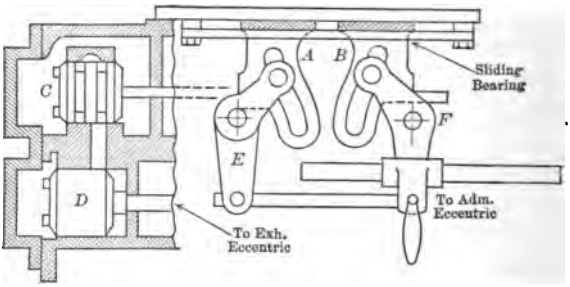

FIG. 120.—CAM WRIST PLATES OPERATING "FITCHBURG" VALVE

of adjustment will be apparent on inspecting Fig. 119, it being specially pointed out that the cone B has a small clearance at the right-hand end and may be adjusted and locked in any position by releasing the tension bolts D D and tightening the compression bolts E E against the lugs C of the cone. The expansible ring A A, with its

Digitized by Google

two parts joined by radial ribs, not shown, is split on a line parallel with the piston rod, and junction strips are set crosswise to keep the steam from passing through.

190. A special form of piston valve known as the "American semi-plug piston valve" is manufactured by the American Balance Valve Company. This semi-plug valve is designed with a view to avoiding the objections to the solid plug valve, which upon wear becomes leaky, and also to the snap-ring piston valve, which, with the natural radial pressures of the rings, generally unequal in different radial directions, tends to wear the valve seat unequally.

A detail section of the semi-plug piston valve is illustrated in Fig. 121 and a reduced illustration of its mounting is shown in Fig.

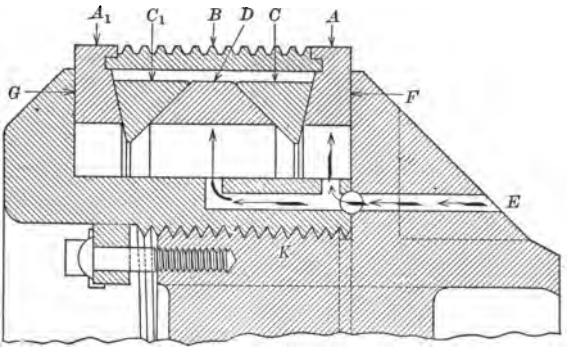

FIG. 121.—DETAIL SECTION OF "SEMI-PLUG" PISTON VALVE

122. The principle on which the valve is constructed is to obtain automatically by means of live steam acting against a series of wedges a sufficient contact pressure between the packing rings and the valve cage or liner, and then to lock the wedges and packing rings in position, which position will be maintained so long as steam is passing through the engine. When steam is shut off, the wedges and rings are designed to unlock because of lack of steam pressure, and when the steam is again admitted to the steam chest the rings again adjust and lock themselves, thus automatically taking up small amounts of wear as the wear occurs.

191. The construction of the valve is as follows: A and A_1 are snap rings containing a groove into which a "wide" ring B interlocks. All three parts are split across and are all under the same initial tension and, therefore, all three expand or contract as one piece. C and C_1 are "wall" rings, and are solid, while D is a wedge ring and is split across and put in place under compression. The

Digitized by Google

particular valve shown is for internal admission, and the proportions of the several parts are planned to take advantage of the velocity of the steam through the small passageways at E to insure a steam-tight joint between the snap rings and the "cage" or valve liner, and to expand the wedge ring which in turn locks, by friction, the snap rings against the radial sides of the "spool" at F and the "follower" at G. The angle between A and C is small and specially designed to prevent contraction and excessive expansion of the rings A and A_1; and it is large between C and D to obtain a strong wedge or locking action at F and G. The valve liners, or cages, are shown at H and H_1 in Fig. 122, and the valve-stem extension and its bearing which

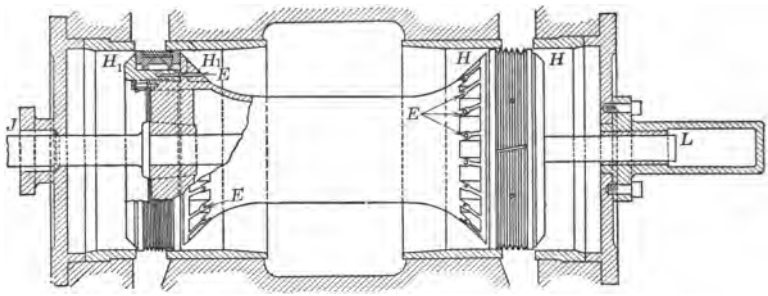

FIG. 122.—"SEMI-PLUG" PISTON VALVE

constitute an essential feature of this type of valve construction, on account of its self-adjusting features, are shown at L. It should be stated here that if this latter feature of construction were involved in all sliding surfaces, the wear would be much less, and what wear there was would be more uniform; and where leakage of gas or liquid is concerned the loss from this source would be less. When high steam pressures are met with in any form of design of valve, this support at both ends is practically an essential feature for good work. For low steam pressures, it is not so necessary, although it is generally advisable, especially on large sizes. This will be apparent when it is considered that a valve which is supported by a valve stem at the stuffing box only, will sag and wear more rapidly at both the valve seat and stuffing box. The "semi-plug piston valve" is designed to afford relief of air when the engine is "drifting," by reason of the air passing through the rings and out of the holes E into the interior of the steam chest.

192. Fig. 123 shows a single piston valve controlling both the high- and low-pressure pistons of a compound engine as applied to the Vauclain compound locomotive manufactured at the Baldwin

Digitized by Google

Locomotive Works, Philadelphia, Pa. Both pistons move in the same direction at the same time, and are secured, through their rods, to the same crosshead. Live steam enters the steam chest at *A*, *A*, and passes, at the phase shown in the illustration, through the head-end port to the high-pressure cylinder. The exhaust steam from the high-pressure cylinder is flowing in the direction of the arrows through the hollow center *B* of the piston-valve body to the head end of the low-pressure cylinder. The exhaust from the low-pressure cylinder passes out through the exhaust port *C* to the smoke stack. For the sake of clearness, this illustration is distorted to the extent that the center line of the steam chest and valve is shown in the plane of the center lines of the two cylinders, whereas, to save space in locomotive construction, it is placed back of this plane. It will be noted that the valve is really two piston valves combined, one formed by the outer rings marked *D D*, controlling the high-pressure and the other formed by the inner rings marked *E E*, controlling the low-pressure cylinder.

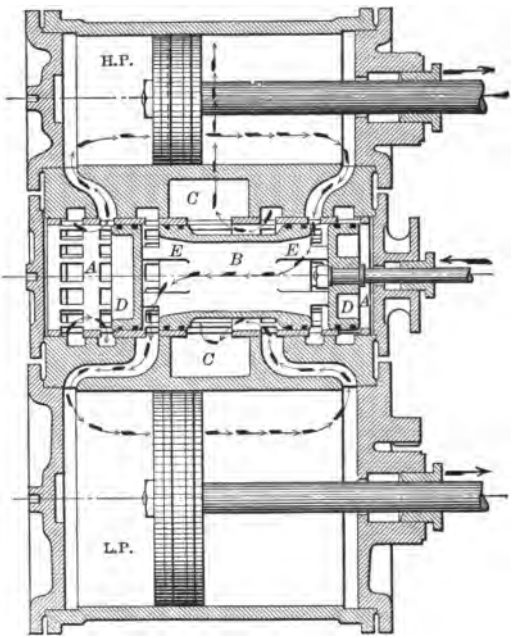

FIG. 123.—VAUCLAIN LOCOMOTIVE PISTON VALVE

BALANCED VALVES

193. Piston valves, as already explained, are, from the nature of their form, balanced valves, except for their own weight. Live steam does not press the piston valve against the valve seat to produce high friction values while sliding back and forth. The lifting or poppet valve may be balanced by using two flat disks as at *A* and *B*, Fig. 249, or as at *V V* in Fig. 252. With two such disks the steam pressure is the same on the two ends of the valve, and it is, therefore,

Digitized by Google

entirely balanced if both disks are the same size. On account of structural difficulties, however, it is the practice in ordinary steam-engine work to make one disk slightly smaller than the other, A being smaller than B in Fig. 249, so that it may pass through the opening at B on assembling the engine.

Pressure-Plate Valves

194. The same advantage of balanced pressure that is inherent in the piston valve may be largely obtained for the flat sliding valve if additional structural features are added to the simple cases already described. The principal structural feature required is a pressure plate which rests against the flattened top or back of the flat valve and excludes the live steam from all or part of the top of the valve, thus leaving in completely balanced valves only a sliding frictional loss due to the weight of the valve itself. Such valve constructions are shown in Figs. 124 to 131.

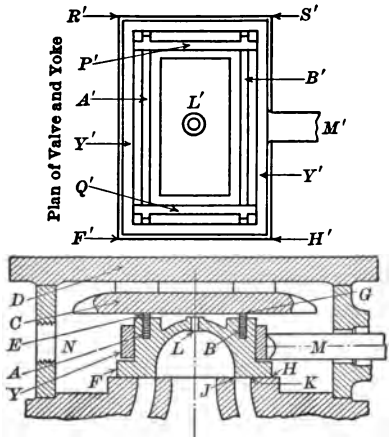

Fig. 124.—Fixed Type of Pressure-Plate Valve

195. That all valves are not completely balanced is shown in Fig. 124, where C is the pressure plate, and A and B (A', B', P', Q') are packing strips which are pressed upward against the plate by springs in the bottom of the groove in the valve. Assume the engine about to start with atmospheric pressure in the main cylinder and the live steam just admitted to the steam chest N. Then the rectangular area between the strips A and B (A' B' P' Q') is also at atmospheric pressure, being open to exhaust through the opening L, and the total pressure of the valve on the valve seat is the steam pressure on the unbalanced area represented by F H minus E G (F' R' S' H' minus A' P' B' Q') plus the weight of the valve itself. When the valve moves from its central position and H passes K the steam in the steam chest rushes into the port J K and produces an upward pressure tending to lift the valve, and it would lift it if it were not for the unbalanced pressure originally allowed for and described above. This particular example represents the type of balanced valve in

Digitized by Google

which pressure strips or bars, or pressure rings are used. Springs are generally used under the pressure strips to hold them up to the solid pressure plate against which they slide. A compensating advantage for this partially unbalanced condition is that water in the cylinder may escape when it is compressed to a pressure greater than the unbalanced pressure, whereas a more perfectly balanced valve that does not use the pressure strips but uses a solid flat pressure plate must have some special construction such as spring pressure on the plate or a relief valve to take care of water that has settled in the cylinder due to condensation of the steam, or that has been entrained with the steam carried over from the boiler.

196. There are three general methods of balancing flat valves by pressure plates. These are the:

(*a*) Fixed pressure plate, Fig. 124.

(*b*) Adjustable pressure plate, Fig. 125.

(*c*) Flexible pressure plate, Fig. 126.

197. The fixed pressure plate *C*, Fig. 124, may be an integral part of the steam chest cover *D*, or it may be braced between the cover and the valve seat as at *A A* in Fig. 127. In the former case there is no provision for wear except through the introduction of bars as shown at *A* and *B* in Fig. 124. The springs in the grooves will press these bars out as wear occurs at the valve seat. The opening at *L* permits any live steam that may leak past the bars to escape directly into the exhaust. Instead of four bars, a circular band is sometimes used in a circular groove.

198. The adjustable pressure-plate valve is illustrated in Fig. 125. Steam is prevented from acting on the top of the valve by means of the adjustable plate shown in the background at *B C E F*, which is bounded on the top by the inclined plane *B C* and moved or adjusted by the rod *A*. This incidentally shows a type of double-ported valve, similar to the Allen valve, there being a cored passageway (not shown, except as indicated by arrows) from one side of the valve to the other.

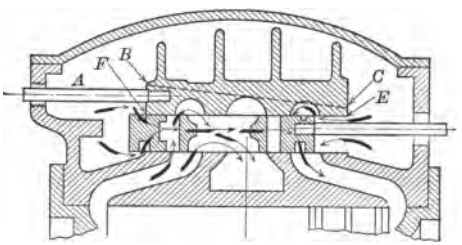

FIG. 125.—ADJUSTABLE TYPE OF PRESSURE-PLATE VALVE

199. The flexible pressure-plate valve is illustrated in Fig. 126. Steam is prevented from acting on the top of the valve by means

Digitized by Google

of the flexible plate A, of steel or other elastic metal so designed as to allow the steam pressure in the steam chest to force the bands D and E down on the top of the valve with only sufficient pressure to prevent leakage.

200. In Fig. 127 the pressure plate $A\ A$ is of the fixed type, although it is not integral with any part of the steam-chest surfaces. It is braced in a fixed position by means of distance blocks between $A\ A$ and $B\ B$ on one side and screws which fit in the steam-chest cover on the other side. Neither the screws nor the distance blocks are shown in Fig. 127. The latter are slightly longer (say .002 inch) than the height $C\ D$ of the valve, so that the valve may slide freely back and forth between the pressure plate and valve seat and still not allow steam pressure to accumulate on the back of the valve. In this construction, the valve is simply one solid piece of material and no springs or bars are needed to keep the steam pressure from the top or back of the valve. In constructions of this kind, the valve should be made as thin as possible, and the distance pieces be exposed to the steam the same as the valve, so that the expansion of the valve, especially on starting the engine, will not cause it to stick or bind between the valve seat and pressure plate. In the valve illustrated in Fig. 127 tongue plates are provided at $E\ E$ for protecting the finished pressure-plate surfaces $F\ F$ from the cutting action of the exhaust steam. Should ex-

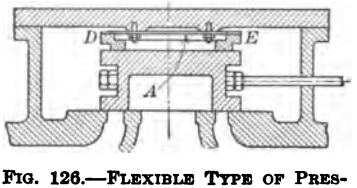

FIG. 126.—FLEXIBLE TYPE OF PRESSURE-PLATE VALVE

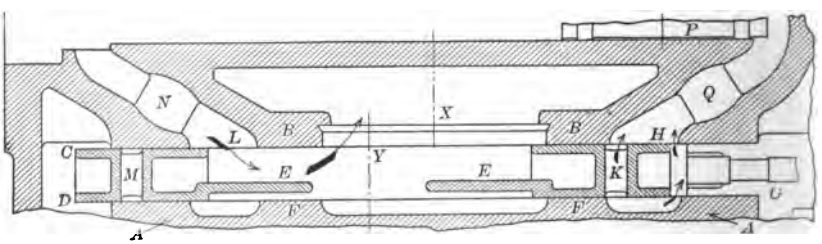

FIG. 127.—"STRAIGHT-LINE" PRESSURE-PLATE VALVE

cessive wear take place between the valve and the valve seat, the distance blocks may be taken out and slightly shortened. The valve shown in Fig. 127 is double-ported and is the latest type as used on the well-known "Straight-Line" engine designed by Professor Sweet.

Digitized by Google

201. In the fixed type of pressure-plate valve, live steam, instead of springs, is sometimes relied upon to supply the pressure under the bars as described in connection with Fig. 124, the live steam being admitted through small openings bored in the body of the valve to the under side of the bars. The bars themselves are sometimes enlarged upon and developed to such an extent as to be unrecognizable as bars, they having cut-off and exhaust edges and controlling the steam the same as the original part of the valve. Such types are shown in Figs. 128 and 129, the former being known as the Ball telescopic valve, manufactured by the American Engine Company, Bound Brook, N. J., and the latter as the flat balanced expanding valve manufactured by the Skinner Engine Company, Erie, Pa.

202. The Ball valve has two rectangular faces and a cylindrical body, the live steam being admitted through the inside, and the

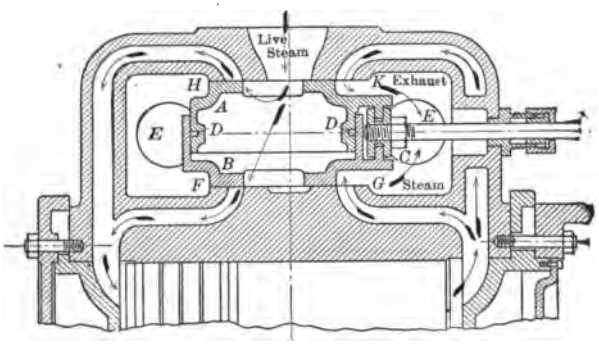

FIG. 128.—BALL TELESCOPE VALVE

exhaust steam passing around the outside edges. For the sake of illustrating the action of this valve in one view the details of construction in the drawing are made different from those on the engine itself. The live- and exhaust-steam paths may be readily traced in Fig. 128. On the engine, which is a horizontal one, the steam chest is on the side of the cylinder and the valve seats *H K* and *F G* are horizontal. Live steam enters from the top and exhaust steam passes out from the bottom of the steam chest. This form of construction, although necessitating steam ports which are more tortuous than those shown in the illustration, gives double steam-admission and double exhaust ports and makes the valve in reality a "double-ported" valve with its small valve travel and without the extra passageway in the valve.

203. The flat balanced valve shown in Fig. 129 is entirely rectangular and made in two parts with alternate rectangular bars and

Digitized by Google

grooves cut parallel to the port and nearly across the entire width of the valve. The depth of the grooves is a little greater than the height of the bars, so that when fitted together there is room for the live steam to flow in. The pressure thus exerted at the twelve spaces similar to the three shown in the upper left half of the Figure at D, forces one-half of the valve against the valve seat H, and the other half against the face of the steam-chest cover K. In the position shown, the first space, counting from either side, exercises the expanding pressure. As soon as the valve opens to live steam, spaces two and three receive full balancing pressure. When the valve closes for compression, the fourth and fifth spaces are subjected to compression pressure. The sixth space always has the same pressure as the exhaust. The end areas of the valve are so proportioned that the live-steam pressure keeps the two parts of the valve steam tight at E. The valve is double-ported, both for live and exhaust steam.

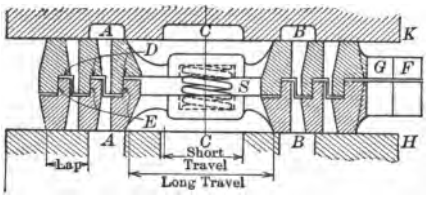

FIG. 129.—SKINNER PRESSURE-PLATE VALVE

The spring at the center of the valve is designed to hold the two parts in correct initial position before the steam pressure is applied. The part of the valve marked with the letters G and F is an L-shaped hook in which the end of the valve stem engages.

204. A special form of balanced valve designed for high pressure manufactured by the American Balance Valve Company, and known as the "Jack Wilson High Pressure Slide Valve," is shown in Figs. 130 and 131. Its characteristic features are that it is indirectly balanced through a valve plate $P\,P$, and that the area from which the steam pressure is excluded varies with the position of the valve.

205. The valve plate $P\,P$ is a "floating" plate resting on the valve $F_1\,F_2$ and receiving steam pressure constantly from the upper side through the openings shown by dotted lines, on the strips $W_1\,W_2$, and intermittently, as explained below on the strips $V_1\,V_2$. The floating plate is held square in the steam chest by wings or projections, $R\,S$, etc., which fit against shoulders on the steam-chest walls at the four corners. The inside packing or port strips $V_1\,V_2$ interlock with the cross or end strips at U, and these in turn interlock with the main packing strips $W_1\,W_2$. The entire packing, thus held together, is prevented from falling out by the set screws $Q_1\,Q_2$ which enter recessed spots in the main strips $W_1\,W_2$. The valve itself is

Digitized by Google

double-ported for both live and exhaust steam, the valve port G_1 acting with the edge F_1 when admitting, and the port H_1 acting with the edge Z when exhausting steam.

206. When the valve is on center, live-steam pressure is excluded from the area A (Fig. 131) multiplied by $2\,C$ (Fig. 130), and the pressure of the valve on the valve seat is that due to the unbalanced

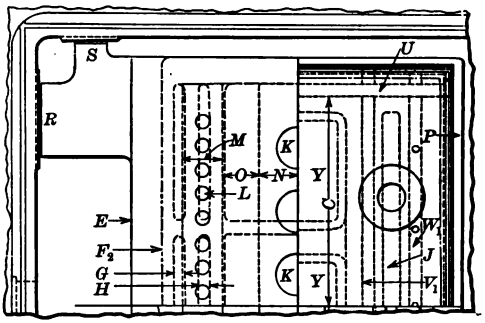

FIG. 130

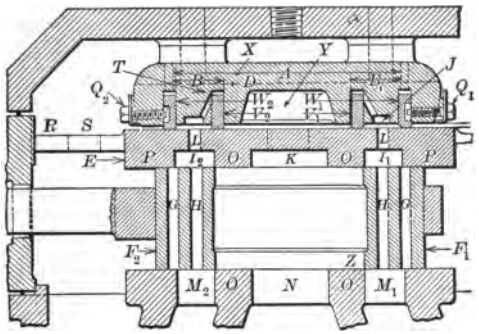

FIG. 131

FIGS. 130 AND 131.—"JACK WILSON" PRESSURE-PLATE VALVE FOR HIGH PRESSURES

area represented by $F_1 F_2$ minus A. When the valve moves to the left sufficiently to open the ports M_1 and I_1, steam passes up through L and J to the back of the balance bar V_1 and the pressure over the newly exposed area on the under side of the floating plate is balanced by the pressure in the area represented by B_1. Thus there is no tendency to lift the plate or the valve, and this construction enables the manufacturers to give a much larger balance area when the valve is in its central position and loaded the heaviest, than is possible in the ordinary forms of balanced flat valves where balance strips are used. The inner balance bars V_1 V_2 run along only the two sides of the valve and terminate at the end bars as shown at U in Fig. 130.

Digitized by Google

207. Before leaving the subject of balanced valves, it should be added that the cylindrical valve known as the Corliss valve, although not a balanced valve in the sense that those just considered are balanced, is, nevertheless, largely balanced in effect. Balancing, it will be recalled, is a device for relieving steam pressure on the top or back of a valve, and so reducing friction. Friction always includes motion, and if a valve can be made to operate so as to have little or no motion when the steam acts on one side only of the valve, it has, so far as wear is concerned, largely the same advantage as the balanced valve. This is the case with the cylindrical Corliss valve which operates with an automatic dashpot release which permits the valve to remain stationary on its seat for a large part of the time during which the live steam port at one end of the cylinder is closed. When this steam port is open the valve is moving fastest and through its greatest distances, but then the live-steam pressure exists to a large extent on both sides of the valve, thus producing partial balancing in the ordinary way during this period of the valve's motion. The greatest difficulty in balancing the Corliss valves arises in connection with the exhaust valve. The Corliss valve will be further considered in connection with the Corliss valve gear in a later part of the book.

Auxiliary or Cut-off, and Riding Valves

208. In all of the valves thus far considered, the same edge of the valve is used to control both admission and cut-off, regardless of the form of the valve or of the number of parts of which it is made. In all of these valves, then, it may be observed that any change in the point of cut-off will involve a change in the point of admission, and while the former change will be a desirable one, the latter may not be, as it may affect the lead and the amount of compression. The group of valves now to be taken up are variously referred to as auxiliary, cut-off, and riding valves. They consist of a regular or main valve which attends to admission, release, and compression, while a separate auxiliary valve attends only to cut-off. Such auxiliary valves are most generally found in three distinct forms of construction under the original names respectively of:

(*a*) Gonzenbach valve, Fig. 132.
(*b*) Polonceau valve, Fig. 134.
(*c*) Meyer valve, Fig. 135.

In each of these three designs the lower valve, or one nearest the cylinder, is called the "main" or "distribution" valve. The upper

Digitized by Google

valve is called the "auxiliary" or "cut-off" valve, and sometimes, when it slides directly on the top or back of the main valve, it is referred to as the "riding" valve. The passageways through the seat in Fig. 132, and through the main valves in Figs. 134 and 135, are called the "auxiliary ports." The two parts of the complete valve are usually operated by independent gears.

The advantage of valves of this type is that the cut-off may be varied without affecting the other events of the stroke.

Gonzenbach Valve

209. The Gonzenbach valve has two separate steam chests, S and T, Fig. 132. The partition C has a rectangular, port-shaped opening D.

210. The Zeuner diagram for the Gonzenbach valve may be constructed as follows: In Fig. 133 let $E\,F'\,O\,F$ and $G\,O\,G'$ be the Zeuner circles, and $O\,F$ and $O\,G$ the outside or steam laps of the main valve. The exhaust construction for this type of valve is treated entirely in the same way as the diagram for the plain D-valve, and is therefore omitted here. The angle of advance for the *main* valve may be assumed to be a.

Let $O\,H$ be the half-travel, b the angle of advance, which is negative (subtracted from 90°) for the *auxiliary* part in this type of valve, and $H\,K\,O\,L$ the Zeuner circle for the auxiliary valve.

Then for the crank position $O\,I$ the main valve is off center a distance = $O\,J$, and the auxiliary valve is off center a distance = $O\,K$. In Fig. 132 it may be seen that when the left-hand edge of the opening E reaches the right-hand edge of the opening D, the main steam chest T is closed, and live steam is cut off from the cylinder even if the main port F is still open. When the opening of the port D becomes zero, the auxiliary valve is off center a distance = $\frac{1}{2}\,E + \frac{1}{2}\,D$; this distance is usually designated by S, and is represented in Fig. 133 by the radius $O\,L$ of the arc $L\,M$. Then the auxiliary valve covers the passageway D, while the crank is going from $O\,N$ to $O\,P$, and opens it at $O\,P$ just before the main valve opens the main port at the crank position $O\,Q$ on the return stroke.

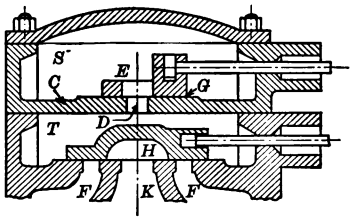

Fig. 132.—Gonzenbach Cut-off Valve

Digitized by Google

211. In this type of valve, then, the opening of the auxiliary port must always occur after the main port closes on one end (closes at $O\,F\,R$), and before it opens on the other (opens at $O\,G\,Q$). Therefore $O\,P$ must always come between the crank positions $O\,R$ and $O\,Q$. If $\frac{1}{2}\,E + \frac{1}{2}\,D$ is made equal to $O\,H$, $O\,P$ will fall on $O\,R$ and the cut-off and main valves will both close at the same time. In this case, the half valve travel of the auxiliary is just equal to $\frac{1}{2}\,E + \frac{1}{2}\,D$ and the auxiliary port will be closed for an instant

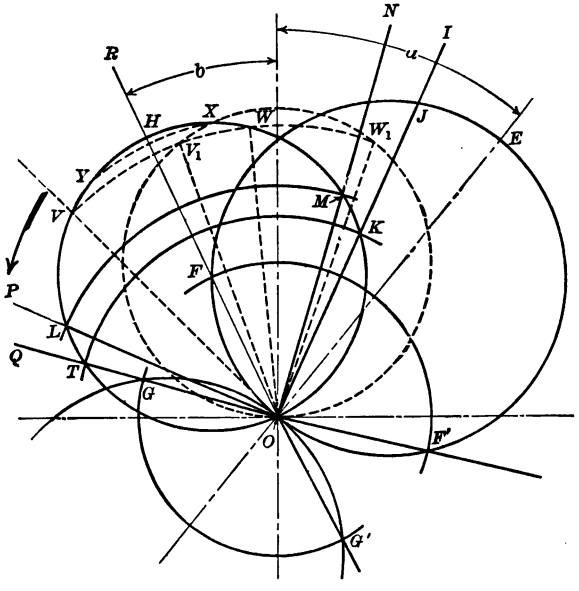

FIG. 133.—ZEUNER DIAGRAM FOR GONZENBACH TYPE OF CUT-OFF VALVE

only. If $\frac{1}{2}\,E + \frac{1}{2}\,D = O\,T$, $O\,P$ will fall on $O\,Q$, and auxiliary cut-off will take place at $O\,I$, and the auxiliary port will be closed while the crank is turning from $O\,I$ to $O\,Q$. The cut-off therefore is limited between the crank positions $O\,I$ and $O\,R$, and S may have any value between $O\,K$ and $O\,H$.

Should a valve gear, constructed so that $\frac{1}{2}\,E + \frac{1}{2}\,D = O\,V$, have its angle of advance reduced from b to zero, auxiliary cut-off would take place earlier at $O\,W_1$ and auxiliary port-opening would occur at $O\,V_1$ before the main port had closed at $O\,R$. Therefore steam would be admitted twice on one stroke, illustrating the inadvisability of altering angle of advance without previously determining, by means of a valve diagram, what the effect would be.

Digitized by Google

212. In laying out a valve of this kind, the area of the main port F, Fig. 132, should be calculated the same as in the plain D-valve; the area of the auxiliary port D (or ports, as there are sometimes two or more) should be made slightly larger than the area of the steam-port opening, and the area of the opening at E in the cut-off valve, or block, should be slightly greater than at D, depending on the desired range of cut-off, etc., as found from the Zeuner diagram. When the valve is on center the point G of the cut-off valve may be located a distance from the right-hand edge of $D = \frac{1}{2}$ travel of valve $+ \frac{1}{4}$ inch, so that G will never overtravel the port and allow steam to enter at the wrong time.

213. In the Polonceau and Meyer valves the auxiliary parts slide on the top of the main block, and both are inclosed in the same steam chest.

Polonceau Valve

214. This valve is made in two parts, A and B, as shown in Fig. 134. The main valve A is laid out as an ordinary D-valve. The cut-off block or auxiliary valve B is solid and slides on A. The motion of B is designed so that it will close the passageway C at any desired point after C has opened to E.

215. The angular advance of the auxiliary block is made large, in some cases as much as 90°. Then for half cut-off the eccentric (180° ahead of the crank) is moving with its maximum velocity. Inasmuch as the use of this valve is limited by its range of cut-off, it is not necessary to follow through the diagram, as its application contains nothing that is not given in the Gonzenbach or Meyer diagram. The former has been explained, and the latter

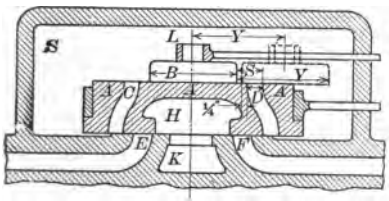

Fig. 134.—Polonceau Riding Valve

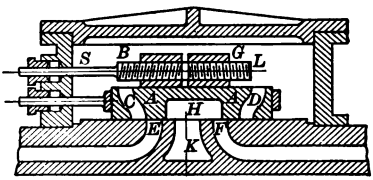

Fig. 135.—Meyer Cut-off Valve

will be in the further instructions given in connection with Drafting-Table Problem No. 3, paragraph 218.

Regarding the dimensions of this valve, it should be noted that the passageways C and D should be equal to or slightly larger than the ports E and F to allow for friction of flow of steam, it being

Digitized by Google

kept in mind that the passageways C and D are computed for live steam and the ports E and F for exhaust steam. If, therefore, C and D are made equal in width to E or F there will be some allowance for friction of flow through the passageway. If greater allowance is desired, C and D may be made still wider. The length of the block B should be such that its left-hand edge never passes the left-hand edge of D. Therefore, length of B = greatest distance the main and auxiliary valve center lines ever get apart $-$ (S $-$ width of D) $+$ $\frac{1}{4}$ inch, or, $B = Y - S + D + \frac{1}{4}$. In order to obtain smooth wear the edges of B must overtravel the edges of A.

Meyer Valve

216. In the Meyer valve the main part is designed in a manner similar to that of the plain D-valve, while the cut-off device consists of two blocks, as shown in Fig. 135. These blocks are adjustable through a right and left screw, while the engine is in motion. Thus the point of cut-off may be made to occur at any point in the stroke up to cut-off by the main valve, which is designed to take place near the end of the stroke. The notes for Drafting-Table Problem No. 4, which consists in laying out a complete design from assigned data, give a full explanation of the working of the valve and of the laying out of the valve diagram, which requires additional construction work not met with in previous problems.

217. A very exhaustive treatise on the subject of auxiliary valves may be found in Zeuner's "Treatise on Valve Gears," pages 159 to 219.

Drafting-Table Problem No. 3.—Double-Ported Valve

218. To design a double-ported valve. Data here given are the same as for the low-pressure cylinder of the series of U. S. Battleships Nos. 13 to 17:

Bore = 66 inches. Stroke = 48 inches. Revolutions = 120.
Cut-off for top or head end = 0.784 of stroke.
" " bottom = 0.715 " "
Lengths of port = 62½ inches.
Exhaust release for top or head end = $3\frac{63}{64}$ inches.
" " " bottom = $5\frac{9}{16}$ inches.
Velocity of entering steam = 175.1 feet per second.
" " exhaust " = 125 " " "
Steam lead, top = $\frac{21}{32}$ inch for each half of port.
Length of connecting rod = 96 inches. Width of bridge = 2 inches.
Diameter of valve rod through valve = $2\frac{7}{16}$ inches.

Digitized by Google

Method of Computation When More Than One Port is Used

219. 1. For the double-ported valve each steam port in the valve seat is divided into two parts (*m n* and *s t*, Fig. 136, for port *T*), so that each part supplies a port passage with one-half the total amount of steam flowing into the cylinder. The exhaust port *Q* is made single, being the same as for a plain D-valve. The arrangement of the ports and passages is shown in Fig. 136.

2. As in the Allen valve, only one-half the steam-port opening need be taken into account in constructing the valve diagram, since the inner port, which gives the other half of the full port opening, is uncovered at the same time that the outside port is opened.

3. Calculate the area of the steam-port opening for one end of the cylinder, considering the velocity of the inflowing steam as given in the data for the problem. (In triple-expansion marine work it is common to assume the steam velocity for low-pressure cylinder from 6,000 to 12,000 feet per minute). Take one-half of this area as the required area to be opened at each port. Divide this by the net length of the ports to obtain the amount which the valve is to uncover the ports for inlet steam. With this port opening, the proper lead, and the cut-off, construct the Zeuner diagram. In this problem, and in all others where the lead is large, it is better to use the formula on page 16 in finding the steam lap, than it is to experiment with the trial-and-error method.

The Zeuner diagram will show data for a valve having half the travel of that of the plain D-valve with the same effective opening, lead, and point of cut-off. In this respect, the Allen valve has the same advantage as the double-ported valve, but the Allen valve can only be used with a direct-connected eccentric when the points of cut-off are earlier than $\frac{5}{8}$ stroke; the double-ported may be designed for a broader range of cut-off, but it has, however, a greater area on which the unbalanced steam pressure can act. This disadvantage may be overcome by balancing the valve as shown in Figs. 136 and 137 by packing rings (as, for example, at *E*), which are kept firmly against the steam-chest cover *H*, by means of springs, thus excluding steam pressure from the space *G*. After the Zeuner diagram is completed for both ends, the various dimensions for the valve are found by the following rules, most of which may be verified by tracing the valve seat *J*, Fig. 136, on the edge of a piece of paper and moving the paper the amount of the valve travel:

4. The minimum width of bridge (*k l* and *i j*) must be such that, for example, the point *g* of the valve will not under any circumstances

Digitized by Google

come closer than ¼ inch to j of the valve seat. It may be found by the following formula:

Minimum steam lap + port width + minimum bridge width = half valve travel + ¼ inch.

If the result should be a negative quantity, or less than the thickness of the cylinder wall (in this problem, 2 inches), discard it,

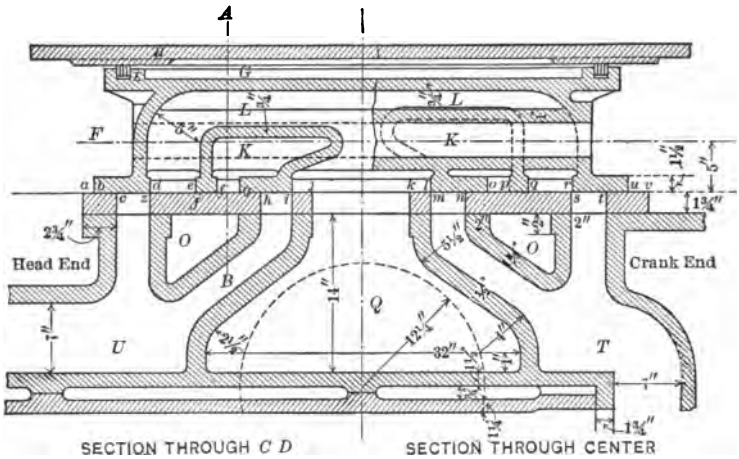

FIG. 136.—LONGITUDINAL SECTION, DOUBLE-PORTED VALVE

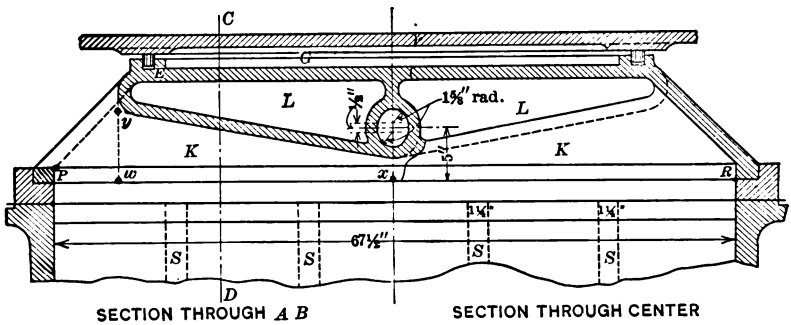

FIG. 137.—TRANSVERSE SECTION, DOUBLE-PORTED VALVE

and make the bridge width equal to the cylinder-wall thickness to help insure a sound casting.

5. Find the width of the exhaust port $j\,k$, which must be such that when the valve is in its extreme position there shall be an opening at least equal to the total steam-port width for one side of the cylinder. This may be found by the following formula:

Digitized by Google

Width of exhaust port = ½ travel of the valve + maximum exhaust lap + total width of steam ports for one end − width of bridge.

6. $f\,g$ = steam-port opening head end; and $o\,p$ = steam-port opening crank end.

7. The thickness $p\,q$ or $e\,f$, Fig. 136, depends entirely on practical considerations. It is a part of the partition wall, and must be thick enough to give a good casting, and to allow facing. In the present design make it 1½ inches.

8. The length of that part of the valve seat ($n\,s$ and $z\,h$, Fig. 136) between the two inlet ports on each end must be such that the point q does not overtravel s, also such that e does not overtravel z. The proper length is determined by the following formula, using values from the head end of the Zeuner diagram when computing $z\,h$, and from the crank end when computing $n\,s$:

Steam lap + opening of port + $p\,q$ + ½ travel of valve.

9. The width of the exhaust passage $d\,e$ and $q\,r$ through the valve, Fig. 136, will, according to the previous paragraph, be equal to ½ travel minus exhaust lap (according to end for which computation is being made). Should this give values to $d\,e$ or $q\,r$ less than $c\,z$, it will be necessary to lengthen $n\,s$ and $z\,h$ arbitrarily. This can only happen when port width plus exhaust lap is greater than half-valve travel and will rarely, if ever, occur.

10. The ports $s\,t$, $m\,n$, $h\,i$, and $c\,z$ are made equal.

11. The maximum distance for $a\,c$ or $t\,v$ should equal such an amount that the points b or u will overtravel the edge, but not so small that the points d or r will overtravel.

Computation for Steam Passageway in the Valve Body

12. The steam supplied to the inner steam ports $f\,g$ and $o\,p$ of the valve is conducted through conical pipes from the sides of the valve which are shown at $K\,K$ in Figs. 136 and 137. The form of a cross-section of these pipes is shown in Fig. 136. The area of a cross-section of the pipe at $y\,w$, Fig. 137, equals the area of the steam-port opening from w to x, less the area of two supporting ribs $S\,S$, w and y being located by trial and error to satisfy this condition. With the point y determined, the slanting lines of the top of the pipe might be drawn directly to x, as the left-hand pipe is not required to feed the right half of the port. It is often drawn from y tangent to the valve-stem casing, as shown in Fig. 137. Make the slope of the side of the valve from P about 45 degrees.

13. The right half of Fig. 137 shows a section through the valve

Digitized by Google

at the center, and the left half a section at $A\ B$ through one of the "conical steam passageways" or "pipes," as they are called.

14. It now remains to make the sum of the two upper areas $L\ L$ in Fig. 137 equal to the area of one of the steam ports at one end of the cylinder. This is equal to $c\ z \times$ length of port. This is most easily accomplished by considering the areas as made up of approximate triangles.

15. Make out a table as follows, and enter the results of the calculations therein:

	Top or head end	Bottom or crank end
Eccentricity		
Travel of valve		
Width of port		
Steam lap		
Exhaust lap		
Angular advance		
Steam lead		
Cut-off, inches		
Cut-off, per cent of stroke		
Exhaust release in inches		
Exhaust release, per cent of stroke		
Compression, inches		
Steam opening		
Exhaust opening*		
Velocity of steam, feet per second		
Velocity of exhaust steam, feet per second		

Area of Exhaust Passageway in Cylinder

16. The drawing is to be completed as shown in Figs. 136 and 137. Place the Zeuner diagram and table of results on one sheet, and the valve drawings on another. The principal dimensions for such parts as are not calculated will be found on the sketch. The openings $O\ O$ are merely cored out to save weight, and have nothing to do with the working of the valve. In many cases this part of the valve seat is cast solid.

17. The area of the exhaust port Q, in this case, is made less than the area of the combined steam ports of one end. This allowance is due to the fact that the section is customarily shown in a central plane, and therefore only about half of the exhaust steam has to pass through the section. In this case the area Q is about 0.7 of the area of the ports. Immediately beyond the section Q the exhaust

* Enter the words "full port" unless the exhaust opening is less than the width of the port.

Digitized by Google

passageway enlarges, due to the curvature of the cylinder wall, and is ample to conduct the steam to the exhaust pipe, represented by the dotted circle with a 12¼-inch radius.

18. In Fig. 137, the length of the port is shown as 67½ inches instead of 62½ inches, as given in data. This increase is made necessary by the four 1¼-inch supporting ribs shown at *S*.

Drafting-Table Problem No. 4.—Meyer Cut-Off Valve

220. 1. In the Meyer valve the upper or auxiliary part is made in two pieces, as indicated in Fig. 140 by *R* and *P*, and the cut-off may be varied at will while the engine is in motion, by moving the two pieces nearer together, or farther apart, by means of the hand wheel *O*, shown in Fig. 140. The top view of the main valve, which in this case is divided into two connected portions, is shown in Fig. 139.

2. The present problem consists in designing a Meyer valve for a steam air-compressor of the following dimensions:

Stroke	30 inches
Bore	16.5 "
Revolutions per minute	60
Maximum cut-off of main valve (head end)	87½ per cent
Lead of main valve (each end)	0
Inside or exhaust lap (each end)	0
Velocity of live steam	6000 feet per minute
" " exhaust steam	4000 " " "
Length of port	13.5 inches
Connecting rod	5 crank lengths
Range of cut-off for auxiliary valve	15 to 87½ per cent

3. In the solution of the problem, find first the maximum port opening required, and then, by means of an ordinary Zeuner diagram, find the outside lap of a plain D-valve that will give the desired maximum cut-off.

4. As shown in Fig. 140, the live steam must pass through the opening *t n b c;* hence *b c* will be equal to the port opening, and inasmuch as the two parts of the valve are not shown on center, the steam lap will not show directly, but will be equal to $c\,v - B\,F$. In the drawing, the valves are shown in a proper working position for cut-off when the crank is at *C V* of Fig. 138. The scale of the Zeuner diagram, Fig. 138, is approximately four times the scale of Fig. 140. The exhaust cavity of the valve is sometimes divided into two parts as shown.

Digitized by Google

To Find the Cut-off Valve Circles C K and C L

5. Place the cut-off valve eccentric about 45 degrees in advance of the main-valve eccentric. Make the travel of the auxiliary valve in this problem 3 inches. (The travel of the auxiliary valve in Fig. 138 is represented by *L K*.)

To Find the Relative Valve Circle Showing How Far the Two Valves Are Apart at Any Instant

6. Draw the line *O K*, Fig. 138, joining the extremities of the diameters of the Zeuner circles for the main and auxiliary valves.

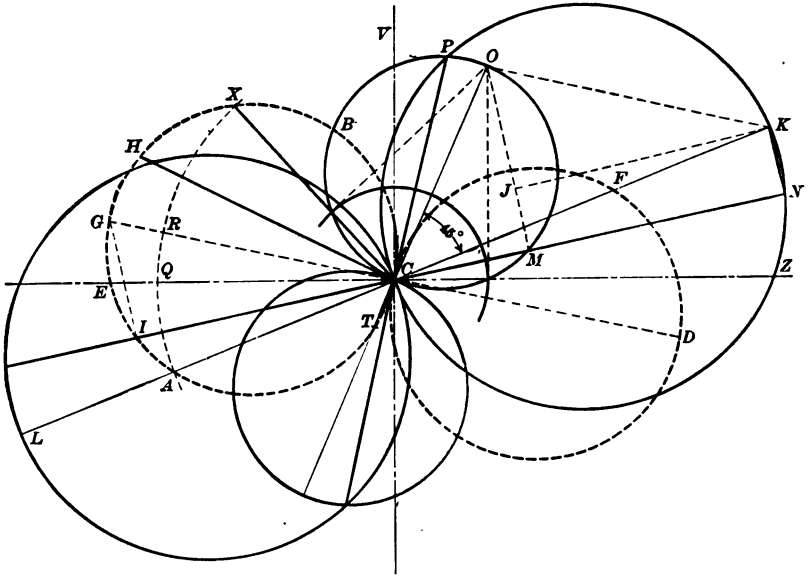

FIG. 138.—ZEUNER DIAGRAM FOR MEYER CUT-OFF VALVE

Through the center of the diagram *C*, draw a line *C G* parallel and equal to *O K*. Upon this line as a diameter describe a circle *C B H I* passing through the center. This is called the "Relative Valve Circle," and shows for any position of the crank the amount the two valves are apart, as the following example will show:

Suppose the crank at *C N*. Then the main valve is off center the distance *C M*, and still going farther away; the auxiliary or cut-off valve is off center the distance *C N*, and also going farther away. Hence the centers of the two valves must be the distance *M N* from

Digitized by Google

each other. But if the relative valve circle *C B H I* shows the relative positions of the two valves for any crank position, then the distance *C I* should equal *M N*, which it does. This may be shown by the equal triangles *O K J* and *G C I*, the line *J K* being drawn parallel and equal to *M N*. A similar relative valve circle, *C F D*,

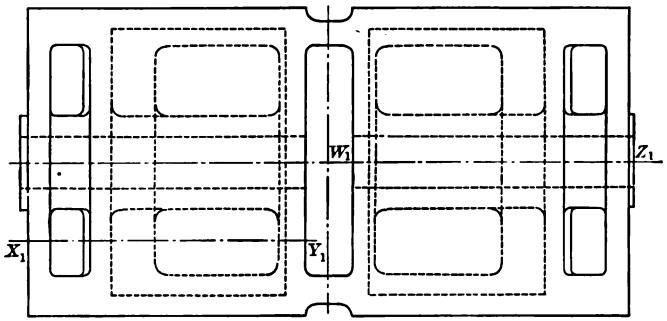

FIG. 139.—TOP VIEW, MEYER VALVE

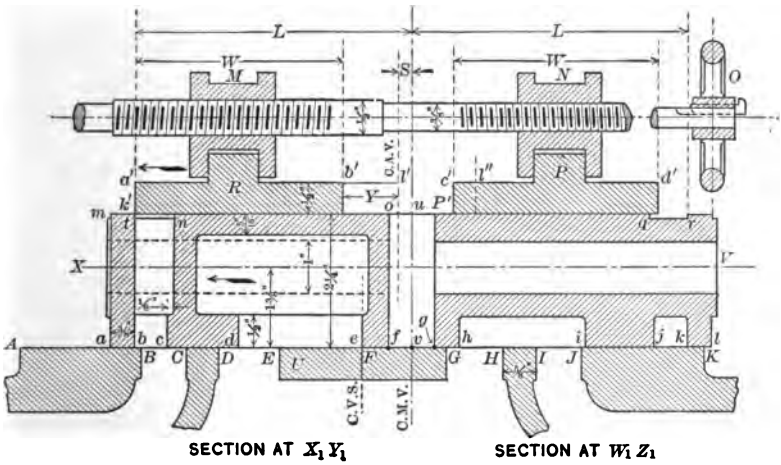

FIG. 140.—LONGITUDINAL SECTION, MEYER VALVE AND VALVE SEAT

may be used for the analysis of the stroke on the opposite end of the cylinder.

Explanation of the Value of S which Determines the Point of Cut-off

7. Let S = the distance from the edge ($a'\,k'$, Fig. 140) of the block R to the cutting-off edge ($t\,b$) of the main valve when the two valves are central with respect to each other, or S = the distance

Digitized by Google

between the main and auxiliary valve center lines when the auxiliary block is in its cutting-off position as shown in Fig. 140.

8. Then S = the distance from t to the main valve center line minus the distance from a' to the auxiliary valve center line = $t\,u - a'\,l'$. If the latest auxiliary cut-off be assumed when the crank is in the position $C\,H$ (Fig. 138), the blocks R and P (Fig. 140) may be designed so that they are zero distance apart (the points b' and c' will then be at l'), at which time S is a maximum and equals $C\,H$ in Fig. 138. All earlier cut-offs may be obtained by separating the blocks and thus reducing the value of S.

9. For cut-off at $C\,P$ (perpendicular to $C\,G$, Fig. 138), S would be zero because $C\,P$ has no intercept in the relative valve circle, both valves being the same distance off center and consequently having zero distance between their center lines. For cut-off earlier than this, the value of S would be negative, being measured on the extension of the crank line, as $C\,T$ and $C\,I$ at crank cut-off positions $C\,O$ and $C\,N$, respectively; and these values would appear as auxiliary laps, or the amount that k' would overlap t, Fig. 140, when the two valves are relatively centered.

10. The earliest possible auxiliary cut-off would be at the main valve admission, which in this problem (there being no lead) would occur at $C\,Z$, Fig. 138. Then S would equal $-\,C\,E$, and the distance between the blocks (call it $2\,Y$) would be a maximum.

To Find L and Locate Tops of Valve Passageways

11. If W = the width of the blocks R and P, and Y = the distance the inside edge of the block is from the auxiliary valve center line (= $b'\,l'$ for position shown in Fig. 140), we have for the general case,

$$L = S + W + Y \quad . \quad . \quad . \quad . \quad . \quad . \quad (1)$$

While L and W remain constant, S and Y vary for different cut-offs, as the following cases, Fig. 138, will show, but the algebraic sum of Y and S is a constant:

For cut-off at $C\,H$, Fig. 138,	$S = C\,H$,	and	$Y = O$.
" " " $C\,X$,	$S = C\,X$,	"	$Y = C\,H - C\,X$.
" " " $C\,P$,	$S = O$,	"	$Y = C\,H$.
" " " $C\,Z$,	$S = -\,C\,E$,	"	$Y = C\,H + C\,E$.

Therefore, the latter value of Y is the greatest it can have between the above limits of cut-off. By substituting any of the corresponding values of Y and of S above in equation (1), the value of L can be

Digitized by Google

obtained. Taking the corresponding values of Y and S for cut-off position $C\,X$:

$$L = C\,X + W + C\,H - C\,X$$
$$= W + C\,H \quad . \quad . \quad . \quad . \quad . \quad . \quad . \quad . \quad . \quad . \quad (2)$$

Width W of Cut-Off Blocks

12. The relative valve motion should never be so great that the inside edge of the block uncovers the inlet passage $t\ n\ b\ c$, Fig. 140. To obtain a width to insure this at all times, it is necessary to consider:

1st. The very earliest cut-off when the crank is in the position $C\,Z$. Y then has its maximum value, and the edge $a'\ k'$, Fig. 140, is

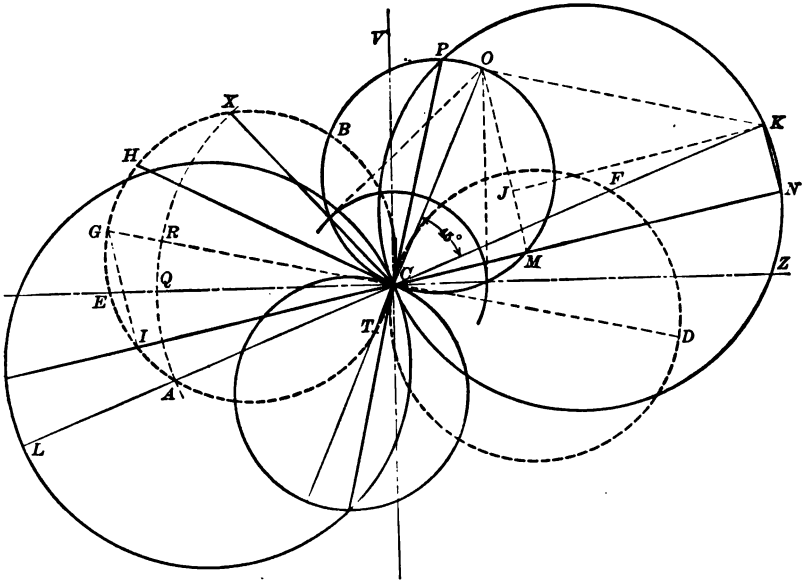

FIG. 138. (DUPLICATE)—ZEUNER DIAGRAM FOR MEYER CUT-OFF VALVE

directly over the edge $t\ b$, and the center of the auxiliary valve the distance $C\,E$ to the right of the main valve center, or in position shown by dotted line l'' (Fig. 140). The outside edge $a'\ k'$ would then have to move the distance $C\,E$ beyond t before the two valves are again centered with respect to each other.

2d. After the valves are centered, allowance must be made for the maximum distance the valves move apart, $C\,G$, which distance the edge $a'\ k'$ may move still farther beyond t.

3d. The edge $a'\ k'$ has now moved the distance $C\,E + C\,G$ beyond

Digitized by Google

t, and the width of the block must be sufficient to equal this and also cover the passageway $t\,n$.

4th. In addition, the block in its extreme position should still have a small amount overlapping the edge n. One-quarter of an inch may be allowed for this.

To sum up, $W = C\,E + C\,G + t\,n + \frac{1}{4}$ inch.

By substituting this value of W in equation (2),

$$L = C\,E + C\,G + t\,n + \tfrac{1}{4}\text{ inch} + C\,H \quad . \quad . \quad . \quad (3)$$

Hence, $2\,L$, or the distance from t to r (Fig. 140), equals $2\,(C\,E + C\,G + C\,H + \frac{1}{4}$ inch$) + 2$ width of steam-inlet passageway. The width $t\,n$ of the steam-inlet passageway may be made $\frac{1}{8}$ inch greater than the width $b\,c$ of the steam-port opening.

13. In drawing the valve for this problem, place the blocks so that cut-off occurs at $\frac{5}{8}$ stroke.

In designs for this valve the value for the distance $b\,k$ may come out so large that the width of the exhaust port is excessive; sometimes there is room to divide the exhaust port and the valves into two parts, as shown in the drawing. Should there not be room in the present problem to permit of this division, omit the part U and run the two exhaust cavities under the main valve into one. Or, as the problem permits, the passageways $t\,n\,b\,c$ and $r\,q\,j\,k$ may curve either towards or away from the center.

14. The dimensions shown on the valve in the accompanying drawing are to be used in laying out the drawing for this problem. Students may omit the top view. In the finished drawing place sufficient dimensions for a working design. Place the points A and K of the valve seat so that the edges a and l of the valve will overtravel $\frac{1}{4}$ inch.

Other Applications of the Cut-off Type of Valve Construction

221. A well-known valve of the Polonceau type is that used on the Buckeye engine, as shown in Fig. 141. The parts marked A form a steam-tight box, except at the opening E and the port F, and comprise the main valve. The blocks C form the auxiliary or "cut-off" valve, which is operated through the rod D and a rotating eccentric, by the fly-wheel governor. B is a hollow valve stem operating the main valve through a separate eccentric clamped to the shaft. The two valve stems B and D receive their motion through a compound rocker peculiar to this type of valve gear. The main and

Digitized by Google

cut-off valves each have uniform travel, and both are arranged so that cut-off takes place, whether early or late, when the cut-off valve is moving at or near its fastest rate.

Piston-valves may also be used to give an independent cut-off, as shown by the Buckeye piston valve in Fig. 142.

222. The Buckeye main and cut-off valves are so connected

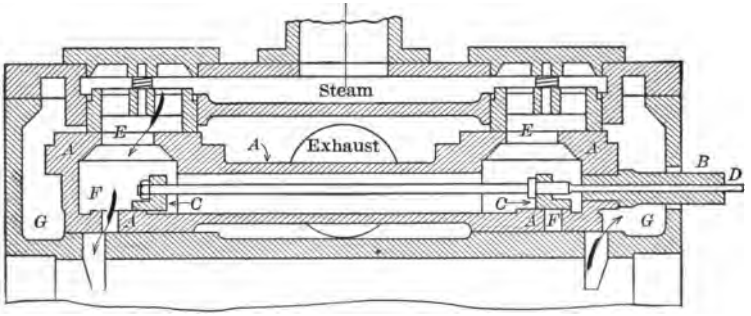

FIG. 141.—BUCKEYE FLAT CUT-OFF VALVE

through a compound rocker that uniform travel of the cut-off valve with respect to the main valve with consequent uniform wear is obtained at all cut-offs. This may readily be seen in Fig. 142, where *H I* is an eccentric rod from an eccentric fixed to the shaft and it operates the main valve *A* directly through the hollow valve stem *B*, and it also swings the rocker *H K* about a fixed center *K*. At the center of *H K* is pivoted another rocker arm, the end *M* being operated from a rotating eccentric under action of the governor, and the end *L* giving motion to the auxiliary valve *C* through the encased valve stem *D*. The motion of the cut-off valve relatively to the main valve is the same as the relative motions of *L* and *H*, or the same as *M* and *K* in reverse order, and, therefore, so far as relative displacements are concerned, the motion of the cut-off valve with respect to the main valve is the same as that of a single valve on a fixed valve seat. The Buckeye riding valve gives variable cut-off by simply changing the angle of advance of the auxiliary rotary eccentric, which is operated by a fly-wheel gover-

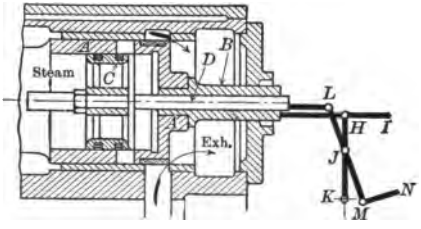

FIG. 142.—BUCKEYE ROUND CUT-OFF VALVE

Digitized by Google

nor. In order to emphasize this, it may be pointed out that the Meyer riding valve is operated by two eccentrics fixed to the engine shaft, while variable cut-off is obtained by changing the steam laps of the auxiliary valve.

223. Another prominent valve of the Polonceau type, and one that embodies at the same time the gridiron form of construction to a marked degree, is that used on the McIntosh, Seymour & Co.'s engine. The section shown, Fig. 143, lies in a transverse plane *D E* of Fig. 144, close to the cylinder head. *A* is the valve seat, *B* the main

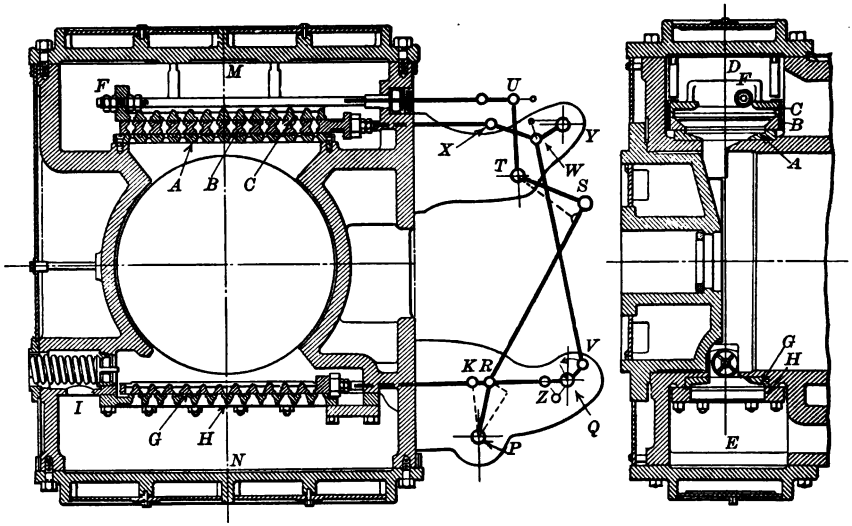

FIG. 143 FIG. 144

FIGS. 143 AND 144.—SHOWING TRANSVERSE AND LONGITUDINAL SECTIONS OF GRIDIRON VALVE, MCINTOSH, SEYMOUR & CO. ENGINE

valve, and *C* the auxiliary valve. Sometimes the main and auxiliary valve parts of a single valve combination are spoken of as two valves, and in this sense the present engine is frequently referred to as a six-valve engine, there being a pair of valves at each corner of the cylinder to control the live steam, and a single-port exhaust valve at each opposite corner to control the exhaust steam. The advantage of the gridiron valve is small travel and reduced friction. The gridiron type of valve requires delicate adjustment for lead, owing to the numerous divisions of the port. This will be readily seen by noting that a $\frac{1}{8}$-inch lead on a single 1-inch port, for example, would be only $\frac{1}{32}$-inch lead at each divided port if the 1-inch port were divided up by a gridiron type of construction into four ports of $\frac{1}{4}$ inch each.

Digitized by Google

The main valves are driven from fixed eccentrics, while the auxiliary valves are operated from rotating eccentrics which are under the control of a shaft governor. The mechanism shown in Fig. 143 for operating this particular make of valve provides opportunity for neutralizing the ill effect of the angularity of the connecting rod, and for giving equalized cut-off on the forward and return strokes. It is also designed to give little or no motion to the valve when not needed, and to give maximum velocity to the valve at or near cut-off.

224. The shaft Q carries two short rocker arms, one represented by the arm $Q\,V$, operating the main admission valve B through the links and levers $V\,W$, $W\,X$, and $X\,B$. The pin W gives a toggle-joint action due to the arm $W\,Y$ which has a fixed center at Y. The other rocker arm on the shaft Q is represented by $Q\,Z$, and operates the exhaust valve G through the links $Z\,K$ and $K\,G$. The shaft P receives a rocking motion from an arm-and-link mechanism which is operated from a rotating eccentric which is under the control of the governor. The fact that the steam valves have very little motion after the ports are closed is made evident by noting that the two arm-and-link combinations $P\,R-R\,S$ and $X\,W—W\,Y$ each cross the dead-center position twice during each cycle. The exhaust valve G has a regular back-and-forth motion from the eccentric $Q\,Z$. The live-steam chest is at M, the exhaust space at N. A relief valve is shown at I.

225. A simplified form of valve gear for the gridiron valve is also made by the same firm for a recent design of horizontal engine in which the auxiliary or cut-off valve is omitted. This design is diagrammatically illustrated in Fig. 145, where A and M are lay-shafts operated from eccentrics, the former being under the control of the governor. A simple gridiron valve at G on the head end of the cylinder controls admission and cut-off on that end, while the release and compression are controlled by the gridiron valve S. At the crank end of the cylinder there are also two valves similar to G and S. The valve, because of its gridiron construction with its many ports, requires only a small total travel, and the mechanism from A to G and

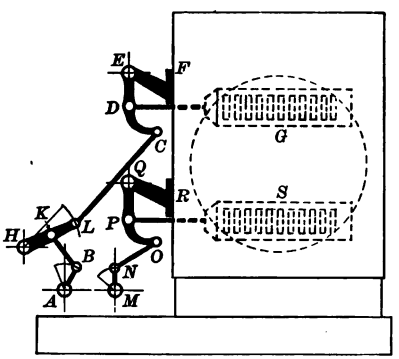

FIG. 145.—DIAGRAM OF VALVE GEAR, McINTOSH, SEYMOUR & CO. HORIZONTAL ENGINE

Digitized by Google

from M to S is designed so that as little travel as possible may take place when the port is closed, and it is designed also so that the cut-offs at all loads will be as nearly equalized as possible. $H\,L$ is an idle rocker driven by a link $B\,K$ from the arm $A\,B$. The action given by this mechanism is termed by the makers a "double-pause motion" because it serves to give an extra long dwell to the steam valve when it is in the closed position. In this design the valves are located in the cylinder head and, therefore, there is direct flow of live steam in the direction of the moving piston instead of its first being deflected by impinging on the cylinder head as it enters.

226. It has been pointed out that the auxiliary or cut-off valve, when used in steam-engine construction, makes the cut-off point independent of admission, release, and compression. The latter three, however, are bound together, and if one is changed to secure an advantage it is quite likely that one or both of the others will be changed to a disadvantage. In the McIntosh & Seymour gear as illustrated in Fig. 143, with a valve at each corner of the cylinder, the admission and cut-off are not only independent of each other, but both are independent of release and compression. The latter two, however, remain dependent and a change in one involves a change in the other.

227. Rocking valves may be built to accomplish the same general results as have been described above for reciprocating valves, but except in the case of the Corliss engine, round valves have not been nearly so widely used. A well-known example of the Gonzenbach type of rocking valve is shown in Fig. 146, from the Wheelock engine. A is the main valve which controls admission, release, and compression, while the auxiliary valve B rotates on a fixed valve seat, controls cut-off only, and is regulated by a tripping mechanism under control of the governor. A tripping mechanism will be illustrated under the Corliss valve gear in paragraph 232.

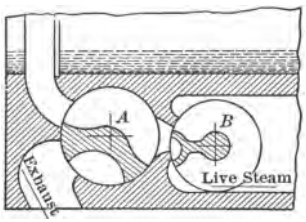

FIG. 146.—WHEELOCK ROTARY CUT-OFF VALVE

ROCKING STEAM VALVES

228. An example of rocking valves is shown in Fig. 147, wherein four are used, one at each corner of the cylinder. They are known respectively as head-end steam valve, head-end exhaust valve, crank-

Digitized by Google

end steam valve, and crank-end exhaust valve. The first controls admission and cut-off; the second, release and compression for head end, etc. The steam valves *A* and *B* allow of double-ported action and both are operated by the same eccentric and shaft-governor. The exhaust valves at *C* and *D* also have double-ported action, and are operated by a fixed eccentric. All valves have positive action as shown in Fig. 148, where the valve-stem arms are lettered to correspond with Fig. 147. A characteristic feature of this, the Atlas, engine among the rocking-valve engines, is the location of the cylindrical valves in the cylinder head so as to give the shortest possible steam and exhaust ports and small clearance space.

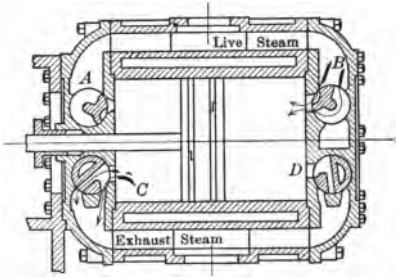

FIG. 147.—SECTION OF ATLAS CYLINDER SHOWING ROCKING VALVES

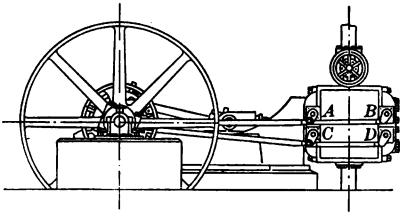

FIG. 148.—SHOWING CONTROL OF ATLAS ROCKING VALVES

CORLISS VALVE GEAR

229. The Corliss valve is the best-known type of rocking valve, and perhaps is more widely used, especially in low-speed high-power steam-engine work than any other one form of valve. The original type of valve gear, known as the "Corliss," was patented by Mr. G. H. Corliss, of Providence, R. I., in 1849. This type of gear was subsequently taken up by numerous manufacturers, who substituted various alterations in details of the design, until now such names as Reynolds-Corliss, Harris-Corliss, Allis-Corliss, Hewes & Phillips-Corliss, etc., are well known.

230. Fig. 149 shows the cylinder, valves, valve gear, and governor of a Hewes & Phillips-Corliss engine. The detail of the parts operating on the valve stem at *E* are shown in Fig. 152, on an enlarged scale. The names of the parts shown in Fig. 149 are:

A, steam-pipe opening.
D, exhaust-pipe opening.
G, *G*, dashpot rods.
B and *E*, steam valves.
F, *F*, . . . radius rods.
H, wristplate for live steam.
J, wristplate for exhaust valves.
C and *K*, exhaust valves.
I, *I*, dashpots.
L, *L*, head-end governor rods.

Digitized by Google

R Z, rocker-arm bracket.
P Q R S, compound rocker arm.
S T, rocker-arm connecting link.
V, *V*, revolving weights.
M, crank-end governor rod.
T W, governor weight.
N, governor belt.

231. The Corliss valve may be considered as a plain D-valve with its steam laps and exhaust laps separated into four independent parts, and one placed at each corner of the engine cylinder.

Advantages: Short, direct passages, reducing steam clearance; reduced valve travel, each valve being designed to move only a little after port is closed and then remain at rest until time to open again; and quick opening of the

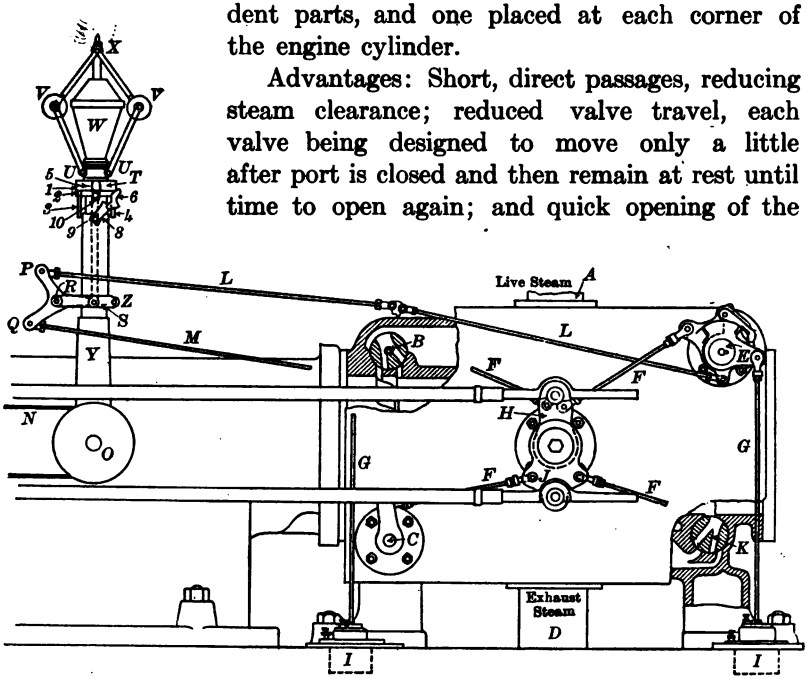

FIG. 149.—CYLINDER, VALVES, VALVE GEAR, AND GOVERNOR FOR A CORLISS ENGINE

ports to admission of live steam. The valve may be single ported or double ported.

Detail and Operation of Trip Mechanism or Releasing Gear

232. The method of regulating the point of cut-off and of opening and closing the steam ports is illustrated in Figs. 150 and 151, the former showing the mechanism at the phase when the valve is about to open the port to steam, and the latter at the phase when the valve is about to close the port. The form of valve gear here shown is the well-known Reynolds gear stripped of the refined details of its actual construction. Both illustrations are similarly lettered and the parts are as follows:

Digitized by Google

V is the valve stem to which the valve is attached.

A_1, A_2 is the steam arm which is keyed to the valve stem and to which the dashpot rod is attached at A; it also has a steel block mounted on it at K.

B, B_1, B_2 is a cam plate which is mounted, and turns freely, on the valve stem and which is stationary so long as the engine runs at a constant speed. The rod from the governor is attached to the cam plate at B_2. The cam surfaces are shown at F and G.

C V C_1 is a bell-crank plate, known as a loose arm, and it also turns freely on the valve stem V. This arm is constantly in motion under the control of the wristplate, the radius rod being attached

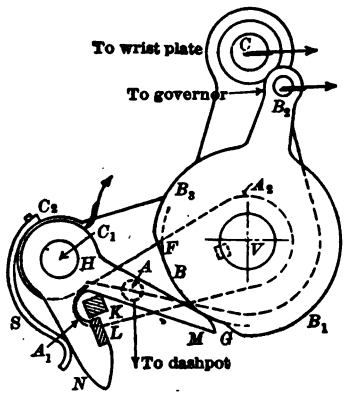

FIG. 150

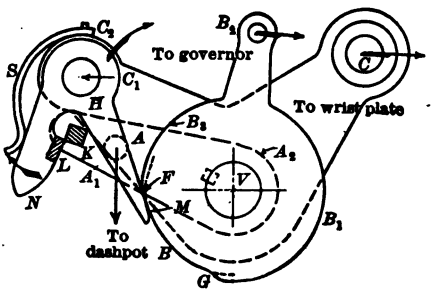

FIG. 151

FIG. 150.—RELEASE GEAR ABOUT TO OPEN PORT
FIG. 151.—RELEASE GEAR ABOUT TO TRIP AND CLOSE PORT

at C. A pin is fixed in this arm at C_1, on which a double-arm piece N C_1 M, known as a latch arm or "grab hook," swings freely. One of the arms C_1 M is kept against the surface of the cam plate by means of the spring S, and when it is against the part of the surface B between the cam-lifting surfaces F and G the steel block at L on the other arm is in engagement with the block K on the steam arm and is lifting the steam arm.

233. Remembering that the cam plate B B_1 B_2 is stationary for any one running speed and that the pin C_1 on which the latch arm swings is always swinging back and forth, it will be seen that when the arm C_1 M of the latch comes in contact with the cam surface at F, as shown in Fig. 151, the steel blocks at L and K will disengage and that the dashpot will be free to exert its pull on the steam arm A A_2 and quickly close the valve.

Digitized by Google

234. If the engine should reach a speed above the normal the governor would cause the cam plate to rotate slightly in a counter-clockwise direction, Fig. 151, and this would cause the latch arm $C_1 M$ to strike the cam surface F sooner and would make the cut-off sooner. Similarly, if the load on the engine were increased, the governor would slow down and rotate the cam plate clockwise, thus causing the latch arm to strike F later, giving later cut-off.

235. If the engine should "run away," the speed of the governor would be such as to swing the cam surface F so far around counter-clockwise that the arm $C_1 M$ would ride only on the larger radius B_3 and not allow the blocks L and K to engage and, therefore, not allow the valve to open until the engine speed had been reduced.

If the governor belt or mechanism should break, the cam surface G would swing around so far, clockwise, that the latch arm would ride only on the larger radius B_1, and again would not allow the two blocks L and K to engage, thereby cutting off the steam and stopping the engine.

236. Different makers of Corliss engines build different forms of releasing gear, but fundamentally the action is the same in all. Most

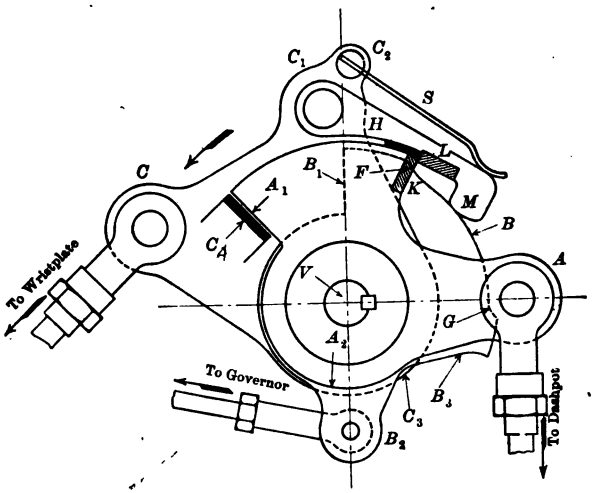

FIG. 152.—TRIP MECHANISM DETAIL, CORLISS GEAR

of the Corliss engines in operation run at a speed of from 90 to 120 revolutions per minute, the latter being considered high in many quarters. Some of the more recent designs of the Corliss releasing valve gear, however, permit of much higher speeds, a notable instance being the Hewes & Phillips releasing gear shown in Fig. 152, which

Digitized by Google

operates successfully up to 200 revolutions per minute. This gear is lettered similarly to the ones shown in Figs. 150 and 151, and the general method of its action is the same. The latch arm, however, in Fig. 152 acts on the cam plate by gravity, the spring at S being simply a guard to limit the rise of the latch arm.

237. A safety device is shown at C_4, which is a leather-faced surface which comes into action with the faced surface A_1 and closes the valve should the dashpot fail to do so.

238. A further automatic safety device is provided on most Corliss engines. This device, illustrated in Figs. 153 and 154, permits

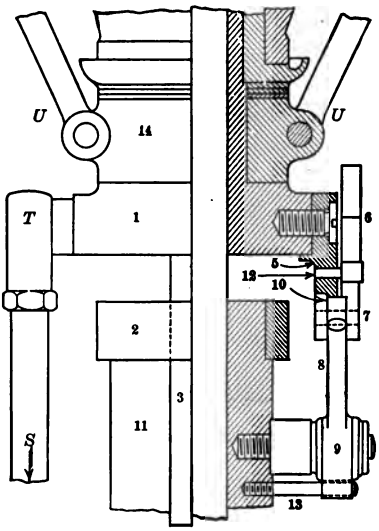

FIG. 153

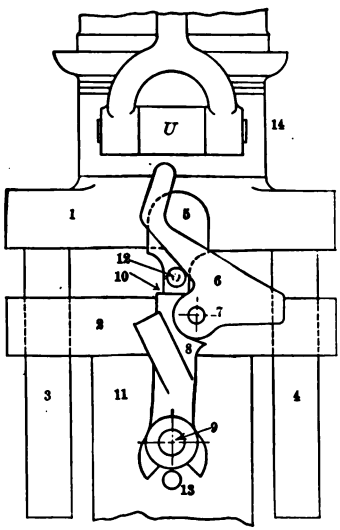

FIG. 154

FIGS. 153 AND 154.—AUTOMATIC SAFETY DEVICE FOR CORLISS ENGINE

the governor to fall its full distance should the governor belt fail while the engine is in service, and thus prevents the valves from opening the ports at all, as just explained in paragraph 235. When the engine is in the process of being shut down by the operator, he swings the device into place by hand so that the governor will not fall its full distance. This leaves the valve gear in such position that the valves will admit steam and allow the engine to start up again when the steam is turned on, without the necessity of bodily lifting the governor weight. The device as applied to the Hewes & Phillips engine is explained in detail as follows: The piece marked *5* in Figs. 153 and 154 is rigidly attached to the vertical moving part

Digitized by Google

of the governor, and the flat surface at *10* rests against the flat surface *10* of the piece marked *8*, which piece is pivoted to the fixed part of the governor post at *9*. The piece *6* is pivoted to *8* at the point *7*. In the position shown the engine is idle, the steam being shut off entirely in the supply pipe. When steam is admitted and the engine starts up the pin *12*, which is fastened in *5*, moves up and presses the sloping surface of *6* so that *6* turns about *7*, causing *8* to swing about *9* and the whole device to fall into the position indicated by *8* and *6* in Fig. 149. Then should the governor belt *N* fail and the governor cease to turn, the governor weight *W* would fall its full distance and the collar marked *1* would come into contact with *2* as shown in Fig. 149. When in this position the latch-arm $C_1 M$, of Fig. 151, will ride only on the larger radius B_1 and will keep the latch blocks from engaging and the valve from moving. The parts marked *3* and *4*, Fig. 154, are round pins fastened to *1* and passing through guide holes in *2*, their purpose being to prevent any rotation of *1* through frictional contact with the rotating part marked *14*.

Limited Range of Cut-off with Single Eccentric

239. The Corliss valve gear *with single eccentric* will operate the cut-off automatically only up to half stroke, as the following argument will show:

When release occurs, the main crank has not quite reached the dead point; also, when compression occurs, the crank has not reached the other dead point. When the crank is half-way between the positions corresponding to release and compression, it is still short of the 90-degree position, and the piston is short of half stroke. When the crank is in this "half-way" position, the exhaust valve, the exhaust-valve radius rod, and the wristplate are all at extreme throw, for the exhaust valve is in exactly the same positions at release and compression, and its motion comes indirectly from the main crank shaft. When the wristplate is at extreme throw the latch arm is in its highest position, and if it does not strike the governor cam by the time it reaches this highest position it will not strike it at all.* But it has been seen that the wristplate (and therefore the latch arm) reaches its extreme throw before half stroke. Therefore, automatic cut-off by the dashpot can not occur later than half stroke. When this is understood it will be seen that the exhaust steam requirements

* In this event the blocks on the latch and valve-stem arms will remain in engagement during the entire cycle and cut-off will occur at or near the end of the stroke.

Digitized by Google

at one end of the cylinder actually control the latest point of cut-off on the other end of the cylinder when a single eccentric is used.

240. In good indicator cards from fast-running, single eccentric Corliss engines, it sometimes *appears* that cut-off takes place later than half stroke. This is only apparent, however, as the cut-off actually *begins* before half stroke, but the relatively fast-moving piston, which is at its maximum at about the middle of the stroke, gets past the center before the valve (even when operated by a good dashpot) closes the steam port. The following calculation may show this more clearly:

A good vacuum dashpot closes the valve in about $\frac{1}{16}$ second, or during $\frac{1}{10}$ of a revolution for engine running 96 revolutions per minute. This is approximately $\frac{1}{5}$ of the stroke at the center, and must be added to the per cent of stroke which has been completed when the latch arm releases the latch blocks to give actual final point of cut-off.

241. One hundred to 120 revolutions per minute may be assumed as practical limit of speed of engine with the older types of releasing gear, owing to wear of releasing mechanism and comparatively slow action of dashpot. More recent designs, however, are successfully running at 150 to 200 revolutions per minute.

242. Later cut-off and a greater range of cut-off may be obtained by using two eccentrics and two wristplates, one set for the steam valves and the other for the exhaust valves.

243. The length of the steam and exhaust ports is made nearly equal to the diameter of the cylinder bore, as a rule. Steam and exhaust valves are usually made of equal diameter, and vary from $\frac{1}{3}$ cylinder bore in small engines to $\frac{1}{6}$ in larger ones. For steam port, a steam velocity of 8,000 feet per minute may be allowed; for exhaust port, 6,000.

Detail and Action of Dashpot on Corliss Engine

244. Dashpots are of various forms and construction, the principle in most cases being that a vacuum is used to accelerate the fall of the plunger or bell (*A*, Fig. 155). An air cushion is provided to bring the plunger to rest without shock. Fig. 155 represents a well-known design. In this case *C* is the dashpot rod leading to the drop lever which, in turn, is keyed to the valve stem. The ball joint is used to accommodate a slight swing of the rod. The vacuum is created between *A* and *B*. *B* is a hollow post and is sometimes referred to as a "stationary piston." *D* is an air or vacuum regulating

Digitized by Google

screw with locknut *E*. Through *D* is drilled a small hole with side outlets just above the cone seat, as shown. Any air pressure which might accumulate in the vacuum space is expelled through small drilled holes leading to the under side of the ball seat at *J*, or, if the vacuum is too strong, it may be regulated by slightly turning the screw *D* which is fitted with a very fine thread. The air cushion is

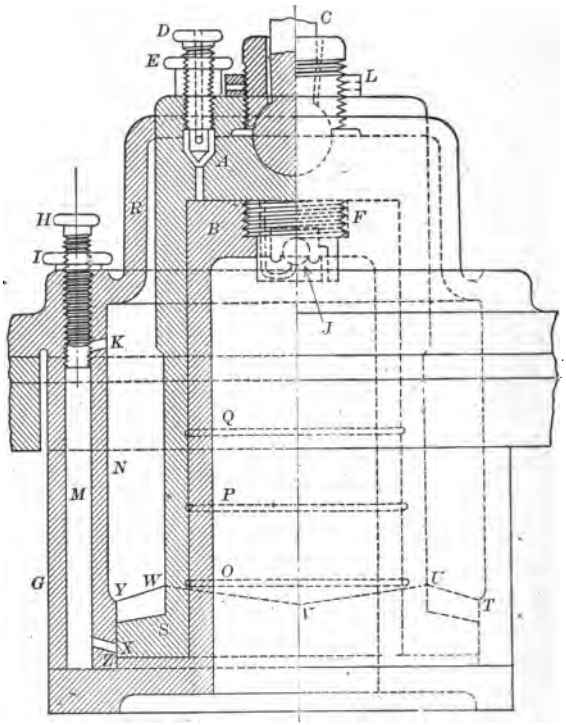

FIG. 155.—DASHPOT FOR CORLISS ENGINE

formed and acts while the point *X* of the flange *S* of the plunger is passing from *Y* to *Z*. The cushioning effect is adjusted by the solid thumb screw *H*, which regulates the flow of air from the passage *M* through the opening *K* to the space *N*. *G* is the body, and *R* the cover of the dashpot. The circular grooves *O P Q*, etc., are for lubrication. The sloping edges *T U V W Y* are designed to prevent a too sudden cushioning effect.

Digitized by Google

Drafting-Table Problem No. 5.—Corliss Valve Gear

245. Data for problem:

Bore of cylinder, 12″.	Distance between centers of valves (horizontal) 32″.
Stroke.....24″.	" " " " " (vertical) 16″.
Bore of all valves 3″.	Radius to hook-rod pin on wristplate..... 8″.
Eccentric throw.. 3″.	" " radius-rod pin on " ..... 6″.
Diam. of hub circle 5″.	Valve-stem diameter..... 1½″.
	Lead, head-end..... ⅛″.

246. Method of procedure: (Reference letters belong to Fig. 156.)

1. Locate centers of valves *A*, *B*, *C*, and *D*.
2. Draw in circles representing bore of valves.
3. Locate center of wristplate *E*.

Bent Rocker to Neutralize Angularity of Connecting Rod

4. Draw rocker *F E G* with upper arm vertical, and lower one at 15 degrees with vertical center line. This angularity is introduced to help correct angularity of the connecting rod. This position of the rocker is its central position corresponding to zero throw of the eccentric. The rocker *F E G* in practice (in long-frame engines) is placed at some convenient point between the cylinder and the shaft, the eccentric rod connecting to the point *G*, and one end of the hook-rod to *F*. The other end of the hook-rod is attached to a pin on the wristplate at *F*. The points *H*, *I*, *Y*, etc., are also on the wristplate. The rocker, in designing, is shown attached to the wristplate shaft for convenience and to save space in the lay-out.

5. Show rocker pins *F* and *G* with a diameter of 1 inch, and draw indefinite arcs on which the extreme travels of *F* and *G* will be shown later.

6. Lay off eccentric throw from *G*, in both directions on a horizontal line and project up to the rocker-pin arc to locate the extreme positions of rocker pins for full-throw forward stroke (G_1 and F_1) and full-throw return stroke (G_2 and F_2). The eccentric throw is laid off on a horizontal line because the eccentric radius is very small compared with the length of the eccentric rod.

7. Draw all arms, links, etc., in solid lines, and cross-section all circles for the zero eccentric-throw position. For arms, links, etc., in full-throw forward- and full-throw return-stroke positions use characteristic lines as shown in sketch, and leave circles open.

8. Locate radius-rod pins *H* and *I* on wristplate 3 inches apart. This is the minimum distance to allow for machining and play be-

Digitized by Google

tween the rod ends. Make pins H and I three-quarter inch in diameter. Show these pins in extreme forward and return positions.

9. Make steam-port width $J\,K = \frac{7}{8}$ inch.
10. Make steam lap $K\,L = \frac{5}{32}$ inch.
11. Make width of passage through valve $L\,M = 1\frac{1}{8}$ inches.

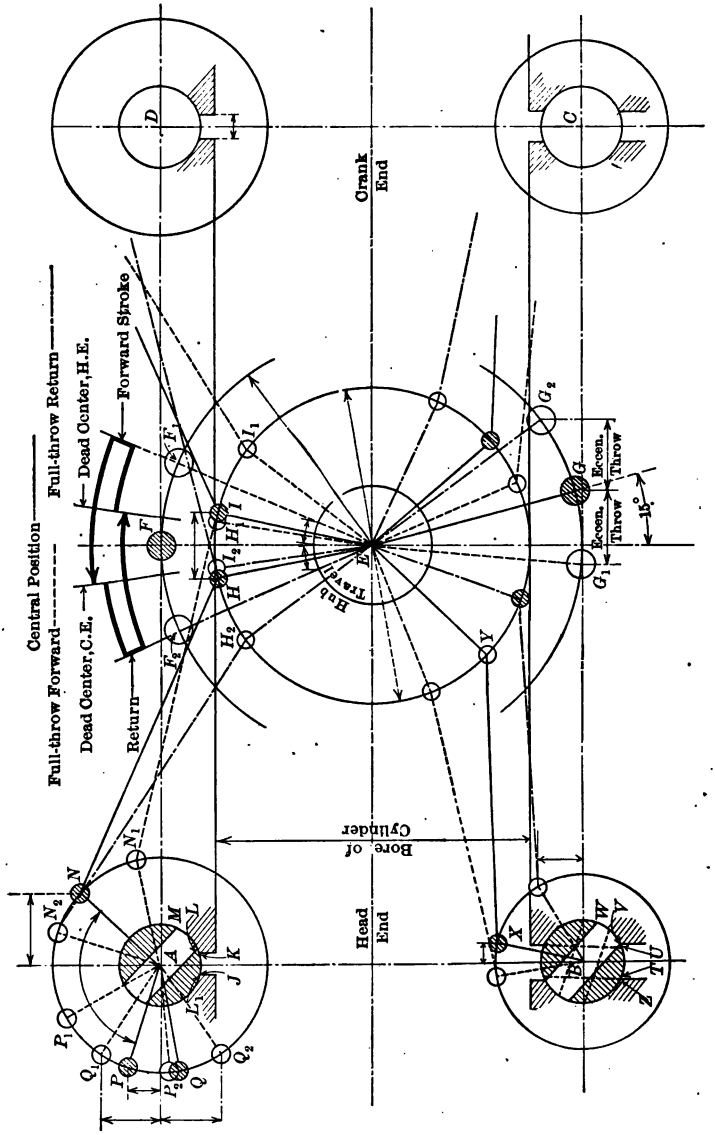

FIG. 156.—LAYOUT FOR CORLISS VALVE GEAR

Digitized by Google

Determining Valve Travel for Cylindrical Rocking Valve

12. Find, by method of trial-and-error, the point N of the radius rod $N H$, and rocker arm $N A$, so proportioned as to turn point L of valve to L_1 (L travels a small distance, say $\frac{1}{16}$ inch, beyond J so as to produce more uniform wear on valve and valve seat) while H travels to H_1. Mark the corresponding extreme point of travel of N at N_1; also mark the other extreme point of travel for N at N_2 when H reaches H_2. The lines $A N_1$ and $N_1 H_1$, and also $N_2 H_2$ and $H_2 E$ must not be allowed to reach a straight-line position. This trial-and-error process is usually accomplished by a stiff paper model on a full scale; but as a student exercise it may be done with two pairs of dividers, or with dividers and compass. The length of the arm $A N$ may be assumed as 4 inches.

13. Locate points on crank end of steam valve corresponding to the points N, N_1 and N_2. The same arguments and methods apply, but the results are slightly different.

Determining Travel of Piston of Dashpot

14. Assume that the drop-lever pin travels in an arc with a radius $A Q = A N$, thus determining the rise of the dashpot plunger. For less rise a shorter radius would be used.

15. Drop-lever pin Q should move equal distances on each side of horizontal center line. The pins N and P on the rocker arms, and the latch pin Q must all swing through the same length of arc = $N_2 N_1$. Therefore lay off points Q_1 and Q_2 symmetrically about the center line $A D$.

16. Q_2 and Q_1 correspond to extreme hook-latch positions. The distance between the hook latch and the pin on the rocker must be great enough to allow hub and arm length of hook to maintain latch effect, if desired, to end of swing. This distance is determined practically by the design of the hook, and in this problem the distance between Q_2 and P_2 may be assumed to be great enough if an angle of 30 degrees ($Q_2 A P_2$) is taken.

17. With the point P_2 determined, the angle between the two arms ($P_2 A$ and $A N_2$) of the rocker is determined. Lay off the central and extreme forward positions of the arm $P_2 A$ at $P A$ and $P_1 A$.

18. Determine corresponding points for steam valve on the crank end.

19. Lay off exhaust port $T U = 1\frac{1}{8}$ inches; exhaust lap $U V = \frac{3}{32}$ inch, and exhaust port through valve, $1\frac{1}{8}$ inches.

Digitized by Google

Avoidance of Dead Points in Valve-Gear Mechanism

20. By trial-and-error find the lengths of the valve arm $B\,X$ (it is to be noted that the exhaust valve is never closed by a dashpot, and that it remains under the control of the wristplate all the time), and the link $X\,Y$, so that V just overtravels T to Z, which gives smooth wearing effect. Neither $B\,X$ and $X\,Y$, nor $X\,Y$ and $Y\,E$ should cross a "dead center" between their extreme positions. Locate central and extreme positions of the arms and links operating this valve.

21. Make the exhaust-valve arm at C the same length as that determined at B, and draw in the central and extreme positions.

22. In addition to showing the arms and links throughout for the three positions in characteristic line work, the passageways in the valves themselves must be indicated by the same character of line work, as per example at B. Place $\frac{3}{4}$-inch circles at all pin joints, except on the large rocker $F\,E\,G$.

23. Place dimensions at all points indicated in the sketch. Show the angles traveled through by the point F of the wristplate while the piston moves through its forward and return strokes. These angles are represented by heavy arcs at the top of Fig. 156. The student should endeavor to find out through his own efforts how these arcs are obtained, but if unable to do so, a hint will be found in connection with the supplementary problem described in the following paragraph.

24. Find the angle of advance and the number of degrees and direction the eccentric is set from the crank, the engine "running over." This can be readily done by remembering that the lead is $\frac{1}{8}$ inch and that this is the distance that L is to the left of K, Fig. 156, when the engine is on head-end dead center. Then find the corresponding new position of G and project it vertically down to a circle whose center is directly under the present point G and whose radius is the eccentric throw or eccentric radius. This circle will be equal to and will represent the circular path of the center of the eccentric sheave, and the projected point from G in its new position will show the position of the eccentric sheave center when the engine is on dead center head-end.

25. Draw a body outline of all the parts surrounding the valve stem, similar to Fig. 151, showing their proper relative positions for cut-off at two-tenths of the stroke. In doing this it is necessary to find first the position of the radius-rod pin N when the piston has

Digitized by Google

traveled two-tenths of the stroke. This may readily be done by drawing a skeleton diagram of the piston stroke, piston connecting rod and crank, for 0.2 cut-off, and placing the crank-shaft center at the center of the eccentric circle described in preceding paragraph. Then knowing the angle between crank and eccentric, the position of G of Fig. 156 will be determined for the piston at 0.2 of its stroke, and the corresponding position N may be readily found. The drawing of the valve-stem parts should be to the same scale as the main problem, the valve stem being taken as $1\frac{1}{2}$ inches in diameter.

Rice and Sargent Corliss Engine

247. A Corliss engine with a number of distinctive features is manufactured by the Providence Engineering Works, probably the oldest engine-building shops in America now engaged in the same business. The engine, however, is one of the most recently designed of all the well-known makes of the Corliss type, being the joint work of Mr. Richard H. Rice and Mr. John W. Sargent, in 1893. It is designed for heavy duty work and for speeds a little higher than those

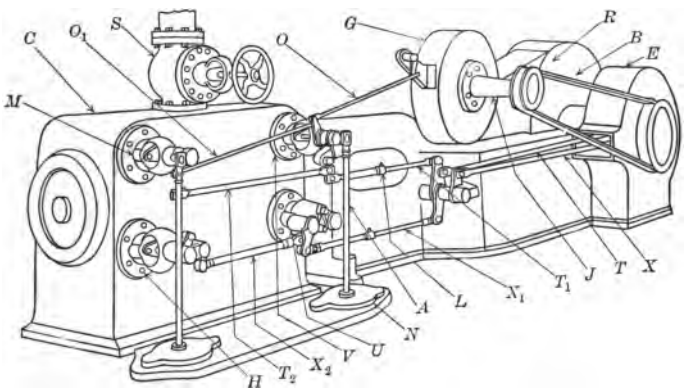

Fig. 157.—Rice and Sargent Corliss Engine

usually obtained with the Corliss engine. It is adapted for use in direct-connected electrical work or with belt or rope drive.

A perspective view of a single-cylinder Rice and Sargent engine is shown in Fig. 157. The several parts are as follows:

S, Steam admission pipe.
C, Engine cylinder.
R, Crank case.
E, Eccentric case.
B, Belt to governor shaft.
G, Governor case.
O, O_1, Governor rods.
T, Live-steam eccentric rod.

Digitized by Google

T_1, T_2, Clutch rod and reach rod for live-steam valves.
X, Exhaust eccentric rod.
X_1, X_2, Clutch rod and reach rod for exhaust valves.
A, Dashpot rod.
N Dashpot cover.

248. It will be noted that the wristplate, which is a common and characteristic feature of Corliss engines generally, is not used. This engine was the first, so far as known, to be built without a wristplate. Two eccentrics, one for live steam and the other for exhaust, are used on engines of all sizes, thus permitting of a wide range of cut-off. Two distinctive forms of governors are used by the Company, one a special form of the Rites inertia governor developed by the Providence Engineering Works, and the other a purely centrifugal governor designed at the same works and known as the Sargent governor. The latter is the newer form and is being now generally used on this engine. The structural features of the valve gear are such as to permit speeds up to 200 revolutions per minute in the smaller sizes of engines. The larger engines run up to 150 r. p. m.

249. The live-steam and exhaust-steam valves of the Rice and Sargent engine are shown in section, together with the valve chambers and the head-end half of the engine cylinder in Fig. 158. The live-steam valve, *1*, is double-ported, and so is the exhaust valve *8*, although they are quite different in construction. In larger sizes of engines triple-ported live-steam and exhaust valves are used to further diminish the valve movement. The live steam enters at *2*, and the exhaust steam passes out at *7*. The piston is shown at *4*, the cylinder head at *9*, and the cylinder-head cover at *10*.

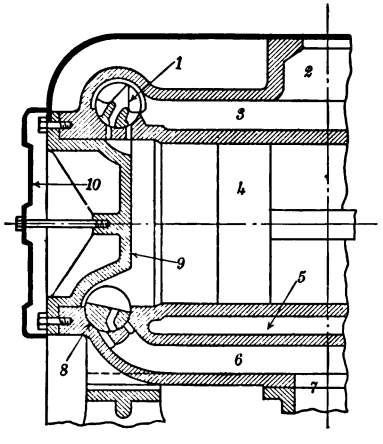

FIG. 158.—SHOWING LONGITUDINAL SECTION OF ONE-HALF CYLINDER

250. The valve gear immediately surrounding the crank-end steam-valve stem at V in Fig. 157 is shown in detail, and also in its two extreme positions, in Figs. 159 and 160. In Fig. 159 the valve is just beginning its motion under the influence of the live-steam eccentric and, after it has traveled a distance equal to its lap, will open the ports. In Fig. 160 the ports are wide open and the valve is just

Digitized by Google

starting its quick return motion under the influence of the dashpot. The several parts of the mechanism are:

1, Valve stem.

2, Governor rocker turning freely on bearing on bonnet, and carrying roll pins *8* and *10*.

3, Governing rod leading to head-end valve, O_1 in Fig. 157.

4, Full arc of swing of governor rocker.

5, Rod from governor, *0* in Fig. 157.

6, Valve-stem "lever" or rocker keyed to valve stem and carrying pin *7* to which dashpot rod *11* is attached and carrying also pin *13* to which the latch block *14* is pivoted.

17, "Steam" rocker which turns freely on the valve stem and to which are pivoted the clutch rod *16* (T_1 in Fig. 157), the reach rod *18*

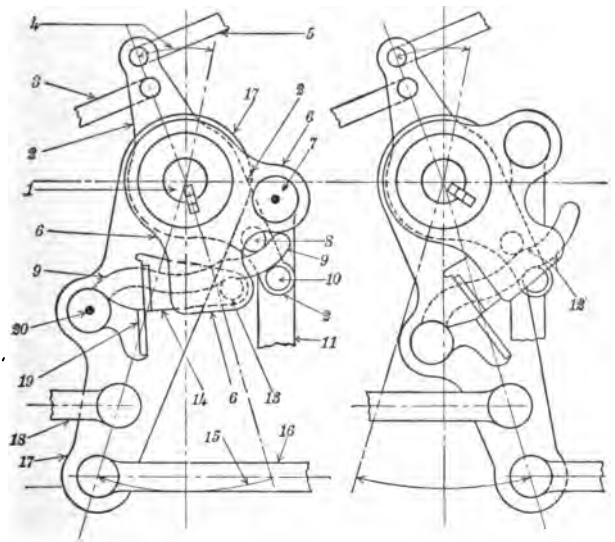

FIG. 159 FIG. 160

FIG. 159.—VALVE BEGINNING TO MOVE TO OPEN
FIG. 160.—VALVE BEGINNING TO MOVE TO CLOSE

(T_2 in Fig. 157), and the toe block *19*, which is integral with the cam lever or cam arm *9*.

Action of the Rice and Sargent Valve Gear

251. The action of the gear is as follows: The eccentric pulls the rocker *17*, Fig. 159, to the right and this carries the toe *19*, which in turn pushes the latch *14* and the valve stem rocker *6*, thus rotating

Digitized by Google

the valve and lifting the dashpot piston. This continues until the curve *12*, Fig. 160, of the cam lever comes into contact with the rollers *8* and *10* on the governor arm which is stationary for any one cut-off, and then the arm *9* and the toe *19* are rotated downwards about the center *20* just enough to permit the toe to disengage from the latch *14*, when the valve-stem rocker *6* is quickly rotated clockwise, Fig. 159, by the action of the dashpot. The latch *14* is prevented from dropping lower than the position shown by a stop block. As the toe *19* is carried back by the steam rocker *17*, it slightly lifts the end of the latch, which then swings a small amount about the pin *13*. The latch, however, drops back in place by gravity as soon as the toe passes.

252. For earlier cut-off the governor rod *5* moves to the right, thus carrying the pins *8* and *10* to the left and permitting the cam-lever curves *12* to stroke them sooner and so disengage the toe and clutch earlier. The part of the cam arm to the right of *12* is a curve such as will guide the working corner of the toe plate *19* so that it moves in an arc of a circle about *1* as a center, thus insuring contact with the latch *14* up to the time that the knock-off curve *12* comes into action on the rollers.

When the governor rod *5* is in its extreme right-hand position the pins *8* and *10* are so far to the left that only the part of the cam lever to the left of the curve *12* comes into contact with them at any point in the valve-gear travel, and this part is so designed that it does not allow the toe *19* to rise high enough to engage the latch block *14* and consequently the valve is not moved and no steam is admitted at all until the engine slows down.

253. The cam arrangement here described is just the reverse of the ordinary Corliss arrangement. In this case, the swinging arm *9* carries the cam curve, and the governor rocker *2* carries the rollers, whereas on the usual forms of construction the governor rocker carries the cam surface and the "toe arm" carries the roller or slide bar. The present arrangement allows the toe and cam to be operated by gravity only, whereas a leaf or other form of spring is necessary to cause the toe to engage with the latch in most of the usual forms of construction.

254. The valve gear surrounding the exhaust valve stem is shown in detail in Fig. 161, and in its proper position at *U* in Fig. 157. The exhaust clutch rod X_1 is indicated at *1* in Fig. 161. It swings the bell crank *3* through the angle *2* about the center *5*. The pin at *5* is set in a bracket *6* which is a part of the exhaust bonnet casting. A connecting link *7* joins the end of the bell-crank arm with the arm *10*

Digitized by Google

which is keyed to the valve stem. The purpose of this connecting link, and its proportions, are such that it will give the exhaust valve considerable motion at the time of opening the ports and a very small motion when the exhaust port is closed and the live steam is pressing the valve down on its cylindrical seat. The large travel during opening is represented approximately by the angle *8*, while the small angle traveled during closure is represented approximately by the angle *9*. The latter angle, it will be observed, is small because the centers of the bell-crank arm, the connecting link, and the crank pin are in line, or nearly so, when the arm *10* is in its extreme right-hand position, and there is always slight travel of a follower as the driving mechanism reaches a dead point, and there is no motion at all at the dead point.

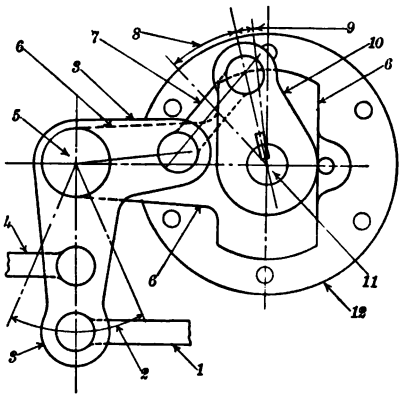

FIG. 161.—MECHANISM SURROUNDING EXHAUST-VALVE STEM

Rites Governor as Applied to Rice and Sargent Engine

255. The governor is shown at *G* in Fig. 157. The governor weights are driven by the governor shaft *J* through the belt *B* from the main shaft of the engine. In Fig. 162 the governor casing is shown at *7* and also at *7* in the section taken on *X X*. The governor shaft at *1* has attached to it two arms *2*, *2*, which carry pins supporting freely the weights *4* and *20*. The weight *4* carries a balancing curved rib *5*, and also has attached to it a complete circular *U*-shaped ring as shown at *6* in the full front view, and also at *6* in the section on *X X*. The weight *20* is similar to *4* and is connected to it by a link *8*. The two weights are also connected by the spring *10*. The circular rings attached to the weights are shown concentric, and one is directly in front of the other for the phase shown in Fig. 162, which is about the position for normal speed. When the engine is at rest the weights and rings are eccentric to each other, but as the engine gains speed they are actuated by both inertia and centrifugal force and rotate about the pins *3* and *19* against the tension resistance of spring *10* and the rings become concentric to each other and remain

Digitized by Google

so for constant speed. The lugs *16* and *18* are both on the front ring *6*, and the pin *17* is on the ring *22*. They act as stops to prevent an excessive relative motion of the two rings.

As the weights move out they carry the pins *14* and *24* further away from each other and so draw in the two connecting links *13* and *23*, shown also in the small diagrammatic sketch at *F*. These links, in turn, draw in the link *12*, which is connected to and rotates

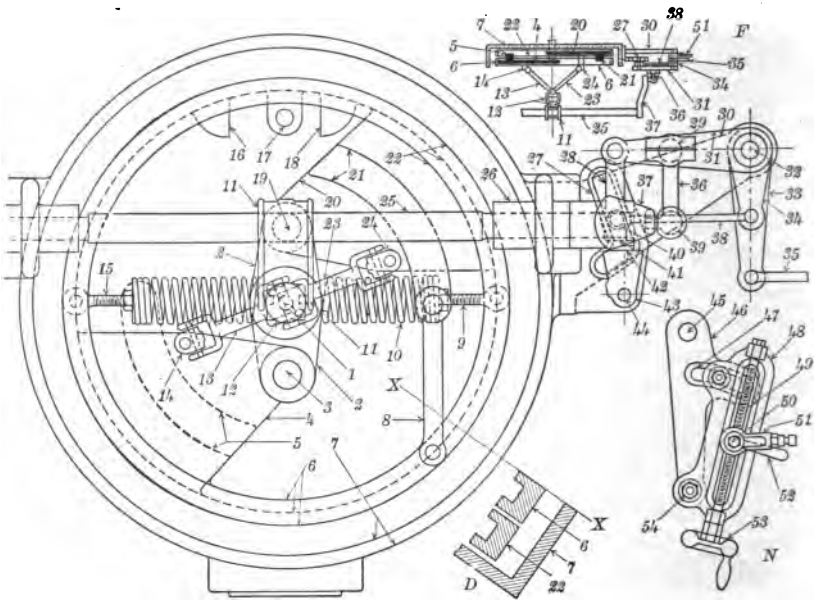

FIG. 162.—RITES INERTIA GOVERNOR AS MODIFIED BY PROVIDENCE ENGINEERING WORKS

the arm *11*. This rotates the cross shaft *25* which is mounted on the governor casing, and also the slanting crank arm *37*. This latter is connected to an arm *31*, which is moved up by means of a link *36* which has ball or universal joints at *39* and *29*. The arm *31* is keyed to the shaft *32* and as it moves up it rotates to the left the arm *33* which is also keyed to *32*. This motion of *33* draws the rod *35* to the left and this rod, which is also the rod *O* in Fig. 157, as well as the rod *5* in Fig. 159, rotates the governor rocker *2* in the latter figure in a clockwise direction, and so carries the rollers *8* and *10* to the left. With the rollers in this new position, the cam curve *12* of the cam lever will strike them sooner and so give an earlier release to the valve and an earlier cut-off.

256. In the compound engines, an additional adjustable arm such

Digitized by Google

as is shown at *N* in Fig. 162, is keyed to the shaft *32*. By means of this arm the low-pressure cylinder may be operated with a fixed cut-off independently of the governor, or it may be made to work by the governor in any ratio to the cut-off in the high-pressure cylinder, or by a combination of both methods, thus giving control of the intermediate or receiver pressure as required for different operating conditions. That these adjustments may be carried out is shown mechanically by considering: First, that when the end *50* of the rod *51* which leads to the low-pressure steam valve, is moved up to the top of the screw *49* and, second, that when the arm *48* is swung about the pivot *54* the full distance to the right and then clamped in the clamping groove *47*, that the effective radius of this adjusting arm will be from *45* to the new position of *50* and that this radius then makes an angle of nearly 180° with the connecting link *51*. With such an angle, there can be practically no effective control of the low-pressure cut-off by the governor because the position of the pins *8* and *10* in Fig. 159 will be very slightly moved. The point of cut-off, therefore, will be practically constant despite the governor fluctuations. By rotating the lever arm *48* about pivot *54* and clamping in groove *47*, hand adjustment of the fixed cut-off may be obtained. By rotating the handwheel *53* and screw *49* so as to raise or lower pin *50*, the ratio between high- and low-pressure lever arms is changed, thus varying the low-pressure cut-off and receiver pressure while still maintaining the low-pressure cut-off under control of the governor.

257. A safety device which mechanically controls the live-steam valves and keeps them from admitting steam to the cylinders in case, for example, the governor belt should break, is also shown in Fig. 162. To understand this, it should be kept in mind that when the arm *33* is in its extreme clockwise position, the governor rocker and the cam-control pins of Fig. 159 are also in their extreme clockwise position. In this position, the trip toe does not engage the latch at all, or if in some designs it should, the engagement is for so short a period that the valve travel is less than the steam lap on the valve, or the port opening is so small as to be ineffective.

When the engine is idle, the unstable support *43*, which is pivoted at *44* to a bracket on the governor frame, is held in the position shown by the flat end *41* of the connecting link *28* resting on the flat surface *42* of the support. This support of the governor linkage holds the governor weights out to the position which corresponds to latest cut-off or nearly so, and permits the engineer to start up the engine without holding any part of the valve mechanism. When the engine

Digitized by Google

is started and approaches its normal speed, the link *28* lifts, through the linkage *37*, *36* and *31*, and this allows the unstable support *42* to swing about its pivot *44* and remain in a hanging position. If now the governor belt breaks, the governor weights would move full in and this would cause the pin *40* to drop to the bottom of the curved slot *27* and pull the arms *34* and *33* to their extreme clockwise positions, thus compelling the valves to cut off the steam as explained in the previous paragraph. If the governor spring *10* should break, the governor weights would be free to move full out and would then lift the pin *40* to the top of the slot and swing the arms *34* and *35* to their extreme clockwise positions.

258. Any supersensitiveness of the governor is controlled by an oil dashpot which connects with the governor shaft at its left-hand end. Such a dashpot is shown in connection with the Sargent Governor, to be described in succeeding paragraphs. Any practical variation in the degree of sensitiveness of the governor such as may be desired when operating alternating current generators in parallel, is secured by screwing the spring plugs at the ends of the springs in or out on the right and left screws *9* and *15*. When screwed "out" the number of active coils in the spring is greater and the degree of sensitiveness is greater. When screwed in the reverse is true. A change of one coil or less is usually sufficient for any desired adjustment. The same method of adjustment applies to any make of spring-loaded governor. The speed of the engine when running is varied by the changing of the tension in the adjusted spring by the governor weights, and this change of tension is not to be confused with that due to adjustment.

Sargent Governor

259. This governor is of the centrifugal type and is now generally used on Rice and Sargent engines. There are two centrifugal weights and they are shown at *1* and *61* in Fig. 163. Each weight, as seen in its top view, is approximately semicircular in form and is a more or less hollow casting. The two weights are so supported by the supporting arms *7* and *58* of bell cranks, and so guided by rods *9*, and so controlled by the spring *2* that all points in the weights move in horizontal lines only. For this reason, the spring tension is not transmitted through pivots. The center of gravity of each weight is in line with its bearings.

260. When at rest the governor weights are full in so that the vertical surfaces touch each other. When steam is admitted and the

Digitized by Google

engine started up, the motion of the horizontal shaft *41* is transmitted through the bevel wheels *42* and *43*, the vertical shaft *44*, and the double arms *10*. At the outer extremities, *11* and *59*, of these double arms, are pins on which are mounted bell cranks, the upper arms of which support the governor weights, as stated in the previous paragraph, while the horizontal arms are pivoted to short vertical rods which connect with the sleeve *13*. The governor weights, bell cranks, and sleeve all rotate with the vertical shaft *44*, while the horizontal ends of the bell cranks and the sleeves have in addition a decided up-and-down motion as the weights move further out or further in from the position shown. In the sleeve is a circular groove into which fits a ring *15*, which is so constrained that it can only move up and down, while the sleeve rotates idly inside of it. The ring has pins *14* fitted to it, front and back, and these engage the governor arm *16*, which is keyed to and swings about the stationary pin 56. The up-and-down motion only of the sleeve *13* is thus transmitted to the point *14* of the governor arm, the oscillations of which are carried through the shaft *56*, the arm *51*, and the governor rod *50* to the governor rocker *2*, Fig. 159, thus changing the positions of the cam-lever pins *8* and *10* and so changing the point of cut-off.

261. The outer end of the governor arm *16* is connected to a controlling cylinder filled with oil, which passes from one side of the piston *22* to the other through an opening *23*, which is regulated in size by an adjusting screw. The smaller this opening, the greater the resistance to the passage of the oil, and the greater the braking effect on the governor arm *16*, which is thus controlled against a too-sensitive governor action.

Corliss Gear Safety Devices

262. Safety devices which prevent the valve gear from admitting steam should the governor belt, governor, or valve-gear parts become deranged or broken, or should the engine exceed a given speed, are used on Corliss engines generally. Two such devices have already been shown, the one in connection with the Hewes and Phillips Corliss engine paragraph 238, and the other in connection with the Rites governor on the Rice and Sargent Corliss engine in paragraph 257. Another device is described in the following paragraph.

263. The safety device attached to the Sargent Governor is illustrated in Fig. 163. Its construction and action are as follows: The bracket *36* is rigidly attached to the crosshead of the engine. It carries two pins, one *32*, to which the safety trip weight *30* is

Digitized by Google

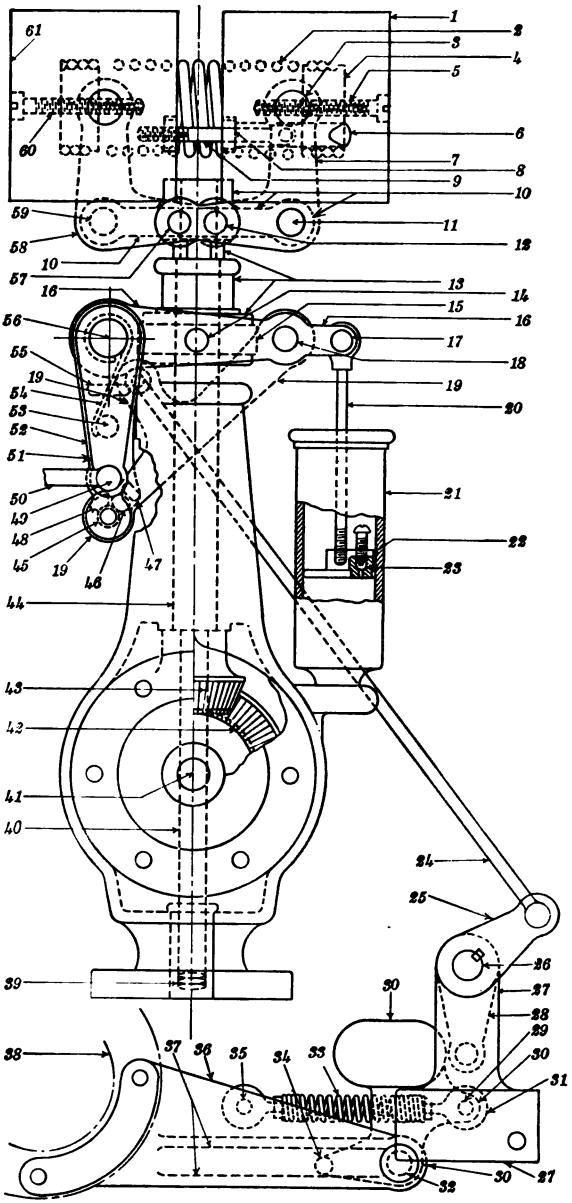

FIG. 163.—SARGENT CENTRIFUGAL GOVERNOR USED ON RICE AND SARGENT ENGINES

Digitized by Google

pivoted, and the other *35*, to which the safety trip weight spring is attached. After the engine passes a certain speed the inertia of the weight *30* overcomes, at the end of the engine stroke, the tension of the spring *33*, causing it to rock forward about *32* and strike the bent rocker arm *28—25*, and thus to move upward the push rod *24*. This also pushes up the releasing lever *19*, which turns freely on the pin *18* in the governor arm *16*. The safety lever *52* is then released, because the pin *46*, which is part of the releasing arm *19*, is moved up out of the way of the pin *45* which is on the safety lever. This lever is now free to turn counter-clockwise under the action of the leaf spring *54* and to rotate with it the shaft *56* and the arm *51*, thus moving the governor rod *50*. As this rod moves to the right it will be seen, by referring to Fig. 159, that rod *5* will move to the right, that the governor rocker *2* will turn clockwise, and that the control pins *8* and *10* will be so far to the left that the cam lever *9* may not even permit the toe *19* to engage with the latch *14*. If it does not so engage, there will, of course, be no motion of the live-steam valve and no steam admission, as explained in paragraph 252.

264. Some of the details of construction, although not necessary to, and not used in the above explanation of the governor action, are shown in Fig. 163 as follows: *4* is a spring plug to which the governor spring is attached; *5* and *60* are adjusting screws acting on the spring plugs for regulating the governor spring tension; *6* is a cored opening for the insertion of the guide rod *9* (there is another and similar guide rod in back); *8* is one of four weight plugs for guiding the rods *9*, *9*; *27* is a stationary bracket fastened to the engine frame; *34* is a pin on an arm of the safety trip weight which acts as a stop against the surfaces *37* when the weight *30* moves a sufficient distance in either direction; *38* is a part of the crosshead of the engine; *39* are "shaft buttons" for taking the thrust of the vertical shaft and governor weights and mechanism; *47* is a stop block on the arm *52*; *48* is a stop block on the releasing arm *19* which bears against the pin *45* and keeps the release arm from dropping when the engine is running regularly; there is another pin at the upper end of the push rod *24* which engages with a stop block *55* on the arm *52* and prevents the release arm *19* from dropping when the safety gear comes into action; *53* is a pin on the safety lever against which the leaf spring *54* acts when it swings the safety lever to the right, the spring itself being fastened to a bracket on the governor casing at its upper end.

Digitized by Google

Spring-actuated Dashpots

265. Either vacuum or spring dashpots are used on the Rice and Sargent engines. The principle of the vacuum dashpot has already been illustrated in Fig. 155. The Rice and Sargent spring-operated dashpot is shown in Fig. 164, where the rod *2* is the same as the rod *A* in Fig. 157, and also the same as rod *11* in Fig. 159. This rod is fastened into the dashpot plunger *12*, Fig. 164, by means of a ball joint, so as to allow for the slight swaying action of the rod as its upper end moves in the path of the pivot *7*, Fig. 159. The spring *1* is relied upon to start and push down the plunger *12* rapidly and thus to rotate quickly the steam valve and close the steam port after the toe has been tripped from the latch, thus taking the place of the vacuum in vacuum dashpots. As the plunger *12* is lifted against the compression of the spring, the air above the plunger escapes through the opening *17* in the dashpot body to the outer space *14*. Air is admitted under the plunger, as it rises, through the lifting of the steel ball at *10* and through an adjustment valve at *8* at the end of the adjustment rod *5*. This air, as the plunger falls, forms a cushion to bring the plunger to rest without noise or shock. During the fall of the plunger such air as is permitted to escape passes only through *8* into the outer case which acts as an air reservoir. The opening at *8* can be varied by turning the handle *3*, thus varying the cushion as desired. At *4* is a set screw for the adjustment rod *5*. The dashpot case is shown at *15*. The pipe *7* is for connecting space *6* and *14* with the outer air when the casing *15* is set into a concrete foundation. Similarly, pipe *9* is for draining oil which collects in the casing.

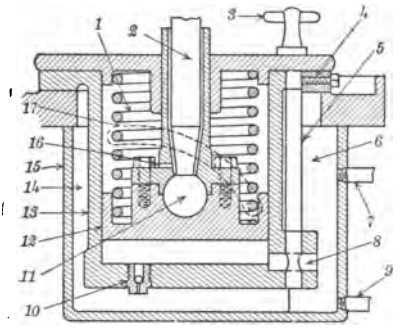

FIG. 164.—SPRING-ACTUATED DASHPOT

Disengaging Clutches

266. A telescopic disengaging clutch that will throw the live-steam eccentric out of action and permit the valves to be operated by hand is indicated at *L* in Fig. 157, and is shown in detail in Fig. 165. The solid center rod *6* is the part of the rod T_1 to the right of

Digitized by Google

L in the Fig. 157, and the hollow rod *5* is the part to the left. When the handle *4* is in the position shown, the two parts are firmly connected as one solid rod because, first, the teeth *3* on the arm *4* are in engagement with the teeth *2* on the rod *6*, and second, the ends of the arm *4* fit snugly against the two collars *7*, *7*, which are fastened to the hollow rod *5* by set screws. When the handle *4* is thrown about one-quarter turn to the position *8* the teeth *3* of the handle simply move into an open channel or groove *1* in the rod *6*, while the teeth on the rod *6* remain in their stationary position at *2*. The groove *1* is slightly wider and deeper than the teeth *3* on the handle and so the rod *6* which receives its motion from the eccentric is free to slide back and forth without driving the part of the rod which leads to the steam valves. An exactly similar disengaging clutch is used on the exhaust clutch rod.

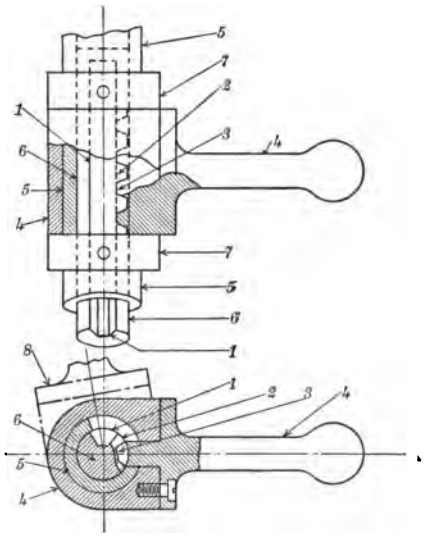

FIG. 165.—DISENGAGING CLUTCH

SETTING OF VALVES AND ADJUSTING OF GOVERNOR AND RODS ON RICE AND SARGENT ENGINES

267. The proper and best setting of valves, governors, and eccentrics, and the adjustment of rods and levers of valve-gear mechanisms for a given set of conditions involves, fundamentally, a thorough understanding of the layout or design of the valve gear. From this a set of directions may be, and usually is, written by each engine manufacturer and sent out to operating engineers, where their engines are installed. Such directions, as prepared by the Providence Engineering Works in connection with their Rice and Sargent Engine, are given in the following paragraphs.

Setting Valves and Eccentrics

268. For setting the valves, see that all connections are so adjusted that the rocker levers are plumb, then turn the eccentrics around on

Digitized by Google

the shaft and see if the eccentric rod is adjusted so that the levers will travel equally each side of the plumb line. Now place engine on the forward center and make coinciding marks on the crosshead shoe and the slide, then move engine backward so that those lines will be ¼ to 5/16 inches apart, then move steam eccentric around on the shaft so that the valve and port will be line and line, and moving to open.

For the exhaust on the high-pressure side, move the engine back about 3½ inches and set eccentric so that valve and ports are line and line and moving to close the proper valve. Then turn engine on to the back center and do the same thing, only turn engine back more than 3½ inches and then move engine up to the marks the way the engine is to run, so as to get out all back lash. If marks do not come exactly the same as at the front end, make up half the difference on the eccentric rod and move the eccentric so the lines on valves and ports come together again. Then do over the whole setting again. Try at all times to keep the length of the rod connecting the two rocker levers so that the two levers will be plumb at the same time.

On low-pressure side, the steam valve should be set to open about ⅜ inch from end of stroke and exhaust valves close from 6 to 8 inches from end of stroke.

On tandem engines make a mark on front end of high-pressure sole plate clamp when engine is cold, then note the amount the high-pressure cylinder moves back after the engine is thoroughly heated, then lengthen out the long clutch rods the same amount. This will make valves in high pressure about the same as if set with engine hot.

The steel plates on latches and toes should lap by each other when engaged, 1/16 inch on cylinders up to 22 inches diameter; 3/32 inch on cylinders from 24 to 30 inches, and ⅛ inch on cylinders above 30 inches diameter.

The "gap" or distance the steel plates move by each other before engaging is adjusted by the dashpot rod and should be kept as small as practicable; 1/16 inch on small cylinders to ⅛ inch on larger ones.

Setting the Governor

269. All parts of the governor should work freely and all cut-off connections should shake freely endwise on their pins. Governor cross shaft must be perfectly free.

Governor may be made more sensitive by screwing one or both the plugs out of the spring, and less sensitive by screwing those plugs into the spring. One-half turn of one plug is enough for a trial.

Digitized by Google

This operation necessitates taking the spring out of the governor and putting it into a vise.

To make the engine run faster, turn the spring screws so as to put more tension on it. The reverse operation will make the engine run slower. One turn of each screw will usually make a difference in speed of about one revolution of the engine. Keep ends of spring equally distant from the weights.

Adjusting Cut-off Rods

270. In adjusting the cut-off rods for high-pressure side of compound engines and for simple engines, adjust the rod from governor to forward valve gear so that the latch at the front end of cylinder will just let go for the latest cut-off, with governor on stop. A good way to determine this is to adjust rod with engine running slow, so that latch will barely hold on and not let go. Then shorten the rod about one-half turn and the latch will always be sure to let go and give the governor the greatest range of cut-off obtainable. Also when the governor is at the top or bottom of cam slot the latch should clear the toe and prevent opening of steam valve. Then square up the cut-off by adjusting the cut-off rod between the front and back bonnets.

In adjusting the low-pressure cut-offs, get the valves square so that the cut-offs will be equal on front and back ends, by means of the cut-off rods between the front bonnets. Then adjust the cut-off rod from governor cross shaft so as to get the receiver pressure desired. This with steam pressure of 100 to 150 pounds for rated load on condensing compound engines will be in the neighborhood of 10 to 15 pounds; on non-condensing compound engines, from 36 to 40 pounds.

Low-pressure cut-off should always be so adjusted as to allow low-pressure steam valves to open slightly when governor allows toe and latch to pass each other on high-pressure side. This adjustment is made when the proper receiver pressure is obtained and not in foregoing. This adjustment will prevent racing on light loads, and in getting ready to put on load.

Single-Acting Steam Engines

271. All of the valves thus far described are for double-acting steam engines, that is, engines admitting steam on each stroke. With one prominent exception, practically all steam engines are double-acting. This exception is the steam engine manufactured by the Westinghouse Machine Co., and is known as the Westinghouse "Ju-

Digitized by Google

nior" (see illustration, Fig. 166). The piston valve is moving to the right and admitting steam to the right-hand cylinder, as shown by the arrows. At the same time, steam is exhausting from the left-hand cylinder. When the valve is over to the left it will be admitting steam to the left-hand cylinder, and the exhaust steam from the

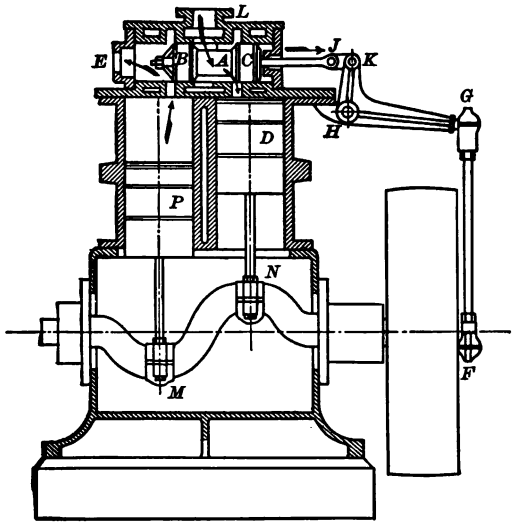

FIG. 166.—WESTINGHOUSE "JUNIOR" SINGLE-ACTING STEAM ENGINE

right-hand cylinder will be passing longitudinally through the inside of the hollow piston valve to the exhaust pipe *E*.

272. The Westinghouse "Standard" is also a single-acting engine and is illustrated in Figs. 167 and 168. The cylinders and steam chest are all cast together with the steam chest a little back of the cylinders and inclined to them. This construction permits the cylinders to be a little closer together and thus made more compact. Also, it causes the valve, by reason of its weight, to be in constant contact with the same side of the steam chest. With the joints of the packing rings of the valve on this side, leakage is minimized. Considering the above form of construction, it will be noted that the two cylinders *I* and *J*, shown in section in Fig. 167, lie in the plane of *G H*, Fig. 168, while the section of the valve and steam chest lies in the plane of *E F*. Likewise the section in Fig. 168 lies in the plane of *A B* of Fig. 167.

In Fig. 167 the valve is rising and just beginning to admit live steam from the steam pipe *K* around the outside of the body of

Digitized by Google

the valve through the port M to the cylinder I. Also steam is exhausting from the cylinder J through the port N directly to the exhaust pipe Q. In Fig. 168 the valve is shown at the phase when the engine has turned 180 degrees beyond that shown in Fig. 167 and it is there falling and just admitting steam to the port N, while

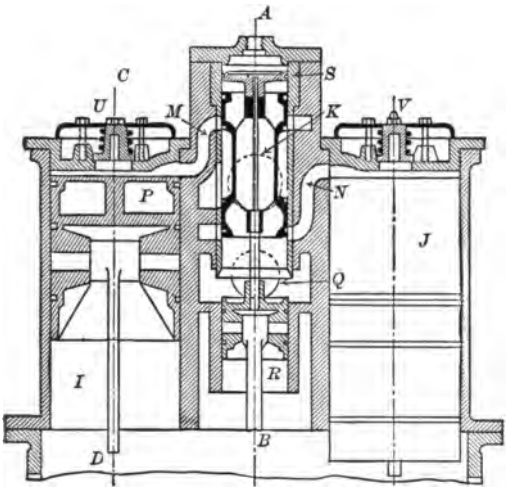

FIG. 167

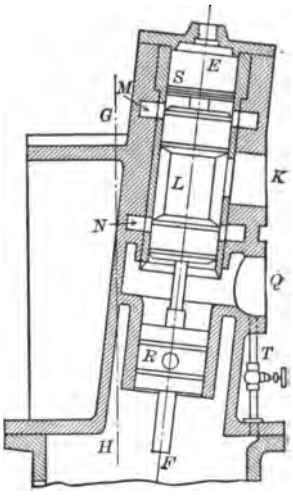

FIG. 168

FIGS. 167 AND 168.—WESTINGHOUSE "STANDARD" SINGLE-ACTING STEAM ENGINE

the exhaust steam is escaping through the port M and through the inside of the hollow valve to the exhaust pipe Q.

The small piston at R acts as a crosshead and also as a steam-chest cover, keeping the exhaust steam from passing into the crank case. The narrow piston at S acts as a balancing device to prevent the back-pressure from exerting its influence on the piston R. The space above the piston S is open to the atmosphere through a hole shown in the steam-chest cover at A.

273. In the Westinghouse engine lubrication of the crank pin and of the enclosed accessible moving parts is obtained by a splash system in which the crank case is first filled with water high enough to half submerge the crank pin when at the bottom of its throw, and on top of the water is floating a few gallons of heavy-bodied lubricating oil. The pipe at T connects the exhaust with the crank case for the purpose of supplying water should the level in the crank case become too low for satisfactory lubrication. Relief valves U and V, Fig. 167, are also used in the cylinder head of this engine to

Digitized by Google

afford a safe escape for any entrained water that might come over from the boiler or from pockets in the steam pipes. These valves operate against spring pressure.

274. A further distinctive feature of this single-acting steam engine is the offset given to the center line of the cylinder. This is shown in Fig. 169, where A represents the crank shaft, $C\ K\ H\ L$ the crank-pin circle, $C\ F$ one of the positions of the connecting rod, $B\ M$ the center line of the cylinder, and $A\ B$ the amount of the "offset," which is equal to one-half the crank length in the Westinghouse engine. This offset reduces the angularity of the connecting rod on the downward driving stroke, the maximum angle being $C\ F\ B$, thus reducing side pressure and permitting the steam pressure to act more nearly at right angles to the crank than in the double-acting engine. On the up-stroke the angularity of the connecting rod is, of course, increased because of the offset and the maximum angle is shown at $H\ G\ B$, but on this up-stroke no work is being done, so that the large angularity is no real drawback. It may also be observed that the crank pin travels through more than 180 degrees on the down-stroke and less than 180 degrees on the up-stroke, as explained in full, in principle, in paragraph 138.

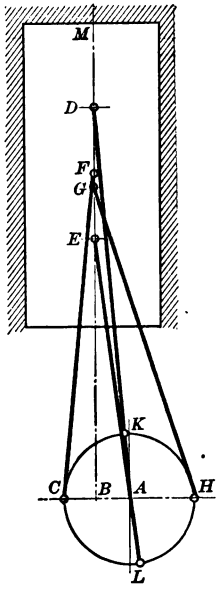

FIG. 169.—SHOWING CYLINDER OFFSET IN WESTINGHOUSE SINGLE-ACTING STEAM ENGINE

Piston Travel Increased by Offsetting Cylinder

275. In all offset constructions the length of the piston stroke is slightly greater than the diameter of the crank-pin circle. The extremities of the piston stroke at D and E may best be found by taking a radius equal to $l + r$ and striking an arc from A as a center. It will cut $B\ M$ at D. Similarly, the point E is obtained by taking A as a center and striking an arc with $l - r$ as a radius. l equals the assigned length $C\ F$ of the connecting rod, and r equals the radius $A\ C$ of the crank. The length $D\ E$ may be readily computed, for $D\ E = B\ D - B\ E$.

Taking $r = 1$ and $l = 5$, and the offset $A\ B = \frac{1}{2} A\ C$,

Digitized by Google

$\overline{BD}^2 = \overline{DA}^2 - \overline{BA}^2 = (l + r)^2 - \left(\frac{r}{2}\right)^2$.

$\overline{BD}^2 = (5 + 1)^2 - \left(\frac{1}{2}\right)^2 = 35.75$, or $BD = 5.98$.

Also, $\overline{BE}^2 = \overline{EA}^2 - \overline{BA}^2 = (l - r)^2 - \left(\frac{r}{2}\right)^2 = (5 - 1)^2 - \left(\frac{1}{2}\right)^2 =$ 15.75, or $BE = 3.97$.

$\therefore DE = 5.98 - 3.97 = 2.01$, whereas the diameter of the crank-pin circle is 2.00.

NORDBERG ENGINES

Nordberg Standard Corliss Valve Gear

276. The Nordberg "Standard Corliss Valve Gear" is constructed as shown in Fig. 170, where the reach rod RC from the wristplate is shown attached to the "steam lever" C, C_1, C_3, C_2, which swings freely on the outer end of the steam bonnet T. This steam lever carries a rocker with an arm $L_1 L$ to which are attached a steel-plate at L, and an arm $L_2 M$, which is pressed down by the flat spring S. The spring on its free end presses against a vertical faced surface on C_3. The steel plate L engages with the plate K on the arm $K\ A\ A_1$, which is keyed to the valve-stem rod V. L drives K and remains in engagement with it until the arm M meets the cam curve F on the cam block B, B_1, B_2, when the rocker $M\ L_2\ L_1\ L$ is slightly oscillated, thus drawing L away from K, and allowing the dashpot to pull down the "drop arm" $K\ A\ A_1$ by means of the dashpot rod $Q\ A$. For earlier cut-off the cam rocker $B\ B_1\ B_2$ is rotated forward slightly by the governor through the rod $B\ P$, thus causing the arm M to meet the cam curve F sooner and so oscillate the arm $L_1 L$ and cause an earlier disengagement between L and K.

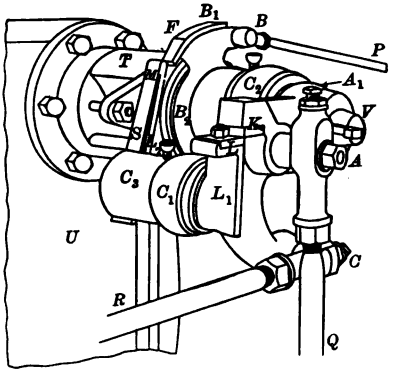

FIG. 170.—NORDBERG STANDARD CORLISS VALVE GEAR

Digitized by Google

Nordberg Long-Range Valve Gear

277. The Nordberg long-range cut-off valve gear is distinctive in that it uses a Corliss valve and includes a mechanism which permits it to cut off at any point up to 0.8 of the stroke when using a single wristplate. In other forms of Corliss valve gear it has been necessary to use two wristplates, one for the admission valves and one for the exhaust valves when cutting off at later than about one-half stroke as explained in paragraphs 239 and 240. That part of the Nordberg long-range gear which surrounds the valve stem is shown diagrammatically in Fig. 171 for the phase at which cut-off is just starting.

278. The reach rod *14* from the wristplate oscillates a three-armed spider *2, 2, 2* which turns freely on the steam bonnet indicated at *11*. At the point *9* on the second arm of the spider is freely suspended a cam arm *8-17* with a cam slot *18-21* whose arcs are concentric about the point *9* but of slightly different radii. There is a short steep transition curve at *19* joining the two concentric arcs. The third arm of the spider carries a 90° rocker *3, 1, 19* on the pin at *1*. The squared end *3* of this rocker engages with the squared end *5* of the drop arm *5-11* which is keyed to the valve stem. The end *19* of the 90° rocker carries a roller which works in the cam slot. The rod *16* is pivoted to the cam arm at *12* and it leads, through the governor mechanism, to an eccentric keyed to the main shaft of the engine, as will be shown at *14-27* in Fig. 172. This eccentric gives a motion to the pin *12* of the cam arm as shown by the fine-line arc *20*. The wristplate gives equal angular motion to each of the three arms of the spider, as indicated by the arcs at *15, 10,* and *22*. The rod *7* leads to the dashpot which is situated above the cylinder on the engine from which this illustration was taken.

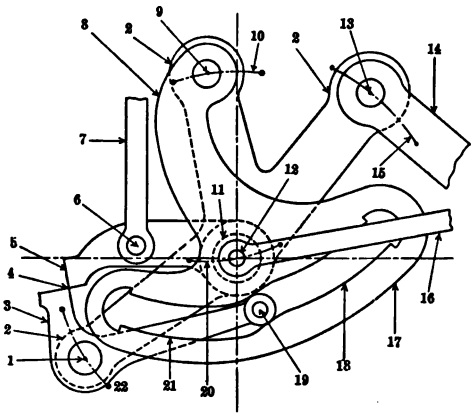

FIG. 171.—NORDBERG LONG-RANGE CORLISS CUT-OFF GEAR. DIAGRAMMATIC DETAIL AT VALVE STEM

The proportions and motions of the mechanism are such that if the engine passes the normal speed at no load, the roller rides

Digitized by Google

back and forth only in the short-radius part of the cam slot *18*. Since the points *13*, *9*, and *1* are fixed with respect to each other and since, in this case, the roller *19* is always the same distance from *9*, the cut-off edge *4* of the 90° rocker will move in an arc of a circle about *11* and will not engage the edge *4* of the valve arm *5* at all. Consequently the valve will not be opened. With the engine running below normal speed the roller engages only with the long-radius part *21* of the cam slot and the edge *4* of the 90° rocker is thrown in slightly, so that it travels always in an arc of shorter radius about *11*, but it now engages the edge *4* of the valve arm all of the time, and so admits steam for nearly full stroke. For normal conditions the cam arm is so positioned by the rod *16*, through the governor, that the roller *19* rides partly on the curve *21* and partly on *18*, mounting the transition curve at *19* each cycle of the engine. As the roller mounts this transition curve the 90° rocker oscillates slightly on the pin *1* and allows the drop arm *5-11* to swing down, the motion being hastened by the dashpot through the rod *7*. The eccentric on the main shaft always gives the same amount of swing *20* to the pin *12* on the cam arm, but the governor changes the position of this arc.

279. The cam arm *8-17* has no fixed center of motion, and it is, in fact, what is termed a "floating" arm. The mechanism as here presented shows only the fundamental elements for a kinematic analysis. In the Nordberg gear there are the usual refinements of construction and adjustment and in addition, in particular, a safety device is provided at *1* in which the two arms *19-1* and *1-3* of the 90° rocker are separate pieces of material. These separate pieces are connected through a compression spring which is sufficiently stiff to compel all of the separate parts to act as one solid piece when running under regular conditions, but which will yield to still greater compression should the head *5* of the valve arm fall in front of the arm *3* while the roller *19* is in the part *21* of the cam slot. If it were not for the yielding of the spring in such an emergency the arm *1-19* would break or would be severely strained. This detail of construction is further explained in paragraph 283.

280. The governor control of the Nordberg long-range valve gear is represented in Fig. 172. The solid or one-piece wristplate is shown at *5* with provision for a starting handle at *4*. The rod *35* from the main eccentric drives the wristplate through the hook plate at *45* and the arm *44*.

A bracket *23* clamped to the governor column *24* gives a fixed point of support to a parallelogram of bars, *15*, *18*, *25*, and *28* at the corner *17*. When the governor is full down, or the engine is running

Digitized by Google

below normal speed, the corner *22* of the parallelogram is pressed down, the three-armed rocker *29* is rotated clockwise, and the cam arm *13* is pulled over so far to the right that the roller *38* rides only on the larger arc of the cam slot. In this position there is steam admission during a large part of the stroke as explained in connec-

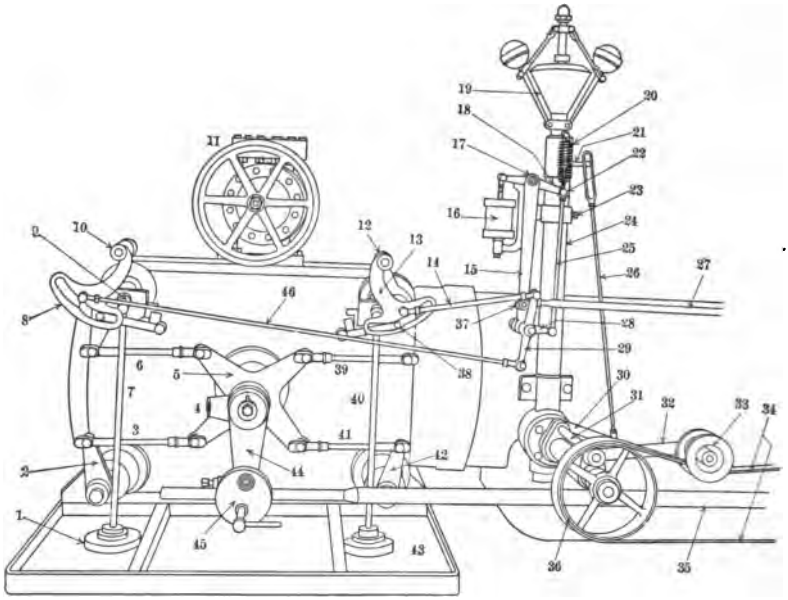

FIG. 172.—NORDBERG LONG-RANGE VALVE GEAR AND GOVERNOR

tion with Fig. 171. The rod *27* from the cut-off eccentric drives the arm *15* through the pin at *37*, and this arm, in turn, drives the three-armed rocker to which the governor rods *14* and *46* are attached.

For any one steady speed of the engine, or for any one governor position, the three-armed rocker *29* remains parallel to itself throughout the cycle. This becomes evident by noting that *17* is a fixed point and also that *22* is fixed for any one steady position of the governor. Therefore the short arm *18* of the parallelogram is fixed and the corresponding arm at *28* must remain parallel to it despite the motion that comes through *27*. If *28* remains parallel to itself at all phases, *29*, which is rigid with it, must also remain parallel to itself. This parallelism is necessary in order that the cut-off at each end may be affected equally.

281. A safety device that automatically shuts off steam, should the governor belt *34* break or run off the pulley *36*, operates as fol-

Digitized by Google

lows: The roller weight *33* falls, turning the rod *31* and arm *30*, and pulling down the rod *26*, at the end of which is a loop that, in turn, swings an arm *21*. This arm is so fulcrumed that it presses sidewise against a rod from the governor collar. This rod has an open-hook engagement with the parallelogram pin at *22* and when pressed sidewise it moves out and allows the spring *20* to raise the pin *22* and so turn the three-armed rocker *28-29* counter clockwise. This moves the cam arms so that the rollers work only in the short-radius slots, and in this position the valve stems are not rotated at all as explained in connection with Fig. 171, and no steam is admitted. A governor oil-pot is shown at *16* for steadying the action of the governor part of the valve gear.

Nordberg High-Speed Valve Gear

282. This type of valve gear is given here in order to point out characteristic details of design that contribute to uniform wear, to minimum wear, and to accuracy of motion during long-running periods. The kinematic action is practically the same as for the long-range cut-off gear. Briefly, the principles of the details of design for this high-speed valve gear are to have the main or heavier forces acting through the valve gear all in one plane of action and to have the cut-off edges and the rotating pins supported at both ends instead of at one end only. In Fig. 173 the principal forces act in the plane which passes through the axis of the reach rod *23*, the mid-section of the "hook" or knock-off arm *21*, the mid-section of the drop arm *19*, and the axis of the dashpot rod *18*. The pins connecting *23* and *1*, *21* and *2*, and the cut-off edge of the drop arm *19* are all supported at two ends. It is, of course, generally impossible to have all forces of a valve gear acting in one plane, and the mechanism is then so designed that the lighter ones will be offset as shown by the construction of the governor connections where the forces acting through the governor rod *11*, the cam slot and roller *9*, and the arm *7* are all in different planes; and the pin connection from *3* to *6* is supported only at one end. Such offset forces, when large, produce serious localized wear at one side or another of the sliding surfaces.

283. The parts of the high-speed Nordberg Corliss valve gear which are not mentioned above are as follows: *2*, *2*, *2*, a three-armed spider operated from the wristplate through rod *23* and carrying the "hook" or knock-off arm *21-20* and the supporting pin *15* for the cam arm *14*. This spider turns freely on the bonnet indi-

Digitized by Google

cated at *13*. The valve-stem housing or bonnet is attached to the main cylinder casting at *17*. The dashpot is shown at *16* and is above the cylinder instead of in the flooring below the cylinder, where it is usually placed. The remaining parts and the kinematic action of all the parts are the same as explained in connection with the long-range cut-off gear in paragraphs 277 to 281.

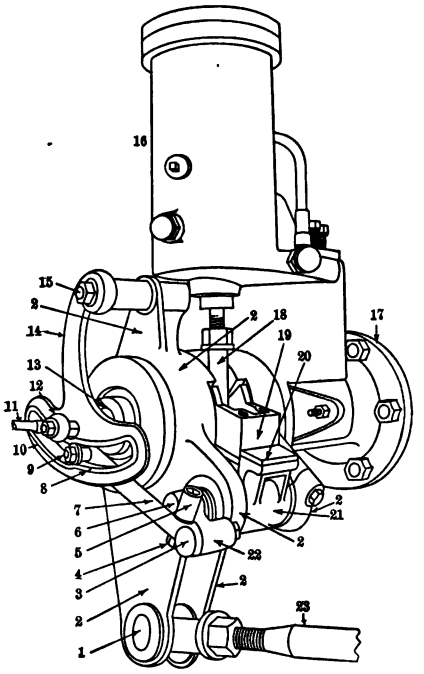

FIG. 173.—NORDBERG HIGH-SPEED CORLISS VALVE GEAR

The safety device for saving the arm *7* in case the knock-off arm *21-20* should jam against the head of the valve-stem arm *19* is indicated at *6-3*. The crank *6-22* is keyed to the pin which carries *21-20*. The cylinder *5*, which is a rigid part of the crank *6-22*, contains a heavy compression spring which holds the cylinder *5* firmly against the top surface of the arm *7* and a bolt head *4* firmly against the bottom of arm *7*. This spring is strong enough to prevent all relative motion between the arm *7* and the crank *6-22* in ordinary running when, of course, the arm *7* turns about an imaginary point which is in line with the axis of the pin *6*. In case of the emergency mentioned above, the arm *7* presses down the bolt head *4*, compresses the spring in *5* still further, and moves out of contact with *5*, the turning of the arm *7* now being about the axis of the pin at *3*.

Valve Motion Diagram for Nordberg Corliss Valve Gear

284. A valve-motion diagram for a 16-inch and 32-inch by 30-inch cross-compound condensing Nordberg Corliss engine is shown in Fig. 174. A method for laying out the diagram as here given is explained in full detail in connection with drafting-table problem No. 5 in paragraph 246. In the present layout it will be noticed that the wristplate arm *A B* and the reach rod *B E* are allowed to pass the dead-center position just before they reach the position

Digitized by Google

$A\ B_1$. This is true also of the arm $A\ C$ and the rod $C\ M$ just before the position $A\ C_2$ is reached. This crossing of the dead-center position gives the rocking cylindrical valve, when direct-connected, an exceedingly small motion during the time necessary for the pin B to travel four times the length of the arc $B_3\ B_1$. This motion is so very small that it is scarcely visible, and for this reason it is sometimes stated that the Corliss valve is at rest for this period. It is during this period that the valve is always closed, and consequently there is full steam pressure on the back of the valve, and it is highly

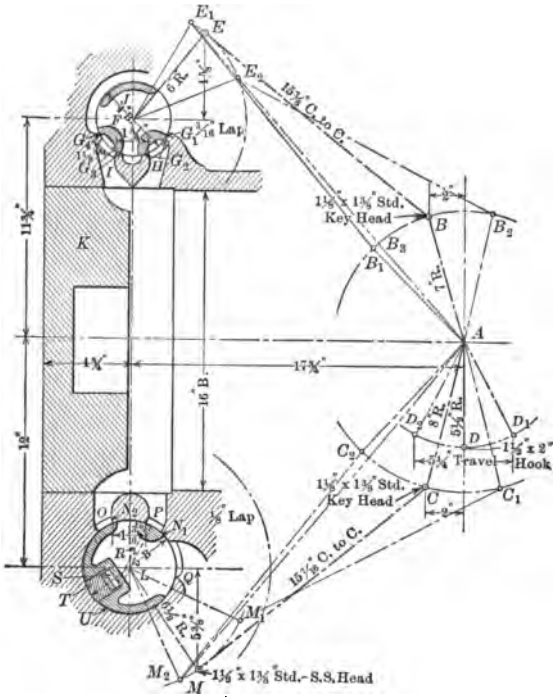

FIG. 174.—VALVE MOTION DIAGRAM FOR NORDBERG CORLISS VALVE GEAR

desirable to have no sliding action. Practically this slight sliding action is nil, for the reason that the "back travel" of the live-steam valve, while B travels from B_3 to B_1 and back, is taken up at the engaging steel plates K and L, Fig. 170, and the back travel of the exhaust valve is taken up, especially after a little wear, by the lost motion in the valve gear pins.

285. The admission and exhaust valves at F and L are patented by the Nordberg Manufacturing Co. The admission valve at F is

Digitized by Google

four-ported and is so designed that there are but four leakage surfaces at G_1, G_2, G_3, and G_4 when the valve is closed. In most Corliss valves there is a chance for leakage at two places for each port opening. In the phase of the mechanism shown in the diagram the eccentric on the main shaft has its effective radius in a vertical position and the valves are on center so that the overlapping distances at G_1, G_2, G_3, and G_4 are equal to the steam lap. It will be recognized that this four-ported valve is in effect two double-ported valves in one specially formed cylindrical casting.

The exhaust valve L is double-ported with exhaust laps as shown at N_1 and N_2. In order to relieve the live-steam pressure which comes on the exhaust valve at O and P at the beginning of the stroke and while it is still moving, a channel is provided at R through the valve to the opening at S. The direct steam pressure at O and P drives the valve against the valve seat at U, while the steam pressure which is introduced at S counteracts this. The weight of the valve is taken up by a gib T and a flat spring of a wave form, on top of it.

Positive Cam Valve Gear

286. A modification of the yoke cam is used in the Nordberg high-speed poppet-valve engines of their "Type S." This cam is distinctive because of its positive drive of the valve in both directions without the aid of the usual return spring. It is illustrated in Fig. 175, where *6* is the eccentric rod, *7* the cam disk swinging about the center *5*, and *8-10-12-11* the cam follower swinging about the center *10*. The two rollers at *8* and *12* work on complementary curves on the cam disk, the curves being laid out so that the contact between the rollers and the cam surface shall be just close enough to prevent any "play" or lost motion. The general idea underlying the construction of these complementary curves is the same as that for the construction of the ordinary yoke cam with

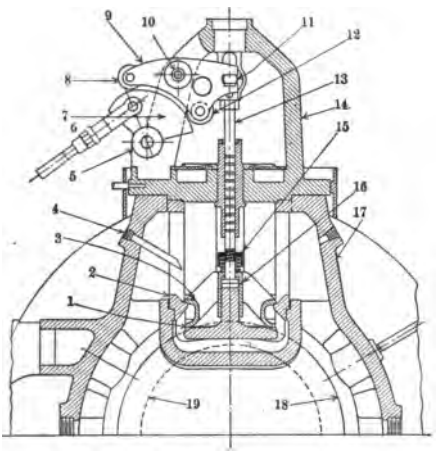

Fig. 175.—Positive Cam Valve Gear for Nordberg Poppet Valve Engine

Digitized by Google

roller followers, but the details of construction vary somewhat, due to the fact that the line connecting the centers of the rollers is a chord of the pitch cam surface instead of a diagonal.

The cam follower takes hold of the valve stem at *11*. In order to allow for any inaccuracy and for expansion, a small compression spring is placed at *15* immediately above the valve, so that in closing, the lifting shoulder *16* of the valve stem drops an exceedingly small distance below the corresponding shoulder on the valve and allows the valve to seat under spring pressure. The double valve seats are designed so that the apex of the cone seat between *2* and *3* lies on the valve center line and is in the plane of the flat seat at *1*. This accords with the principle of having the apexes of the two cone seats at the same point on the center line as explained in connection with Fig. 258.

Effect of Superheated Steam on Valve Construction

287. The use of superheated steam with its high temperatures has led in Europe generally, and in many quarters in this country, not only to the use of poppet valves instead of sliding valves, but also, in the case of the engine here illustrated, to the abandonment of live steam cored passageways in the cylinder casting itself. As may be seen in Fig. 176, which is a perspective of the parts shown in Fig. 175, there is no steam chest as in the ordinary saturated steam engine. The main cylinder is shown at *20* and the valve chest is a separate casting as at *17-24* and is bolted on to the cylinder. The valve bonnet is shown at *14* in Figs. 175 and 176, and the valve casing at *17*. The opening at *4* is for taking thermometer readings. The exhaust eccentric and rod are shown at *22* and *23* in Fig. 176. *24* is the live-steam pipe. The engine-cylinder bore is indicated by the dash circle *19* in Fig. 175.

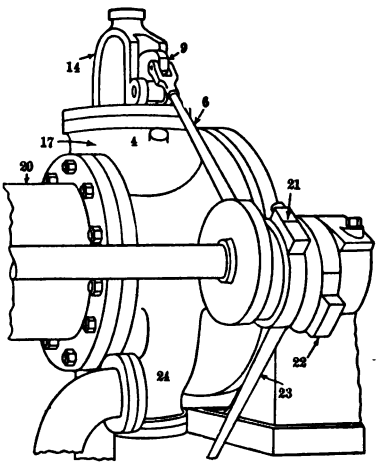

Fig. 176.—Cylinder and Separate Valve Chest for Nordberg Engine Using Superheated Steam

Digitized by Google

SECTION VI.—ECCENTRICS AND SHAFT GOVERNORS FOR STEAM ENGINES

Eccentrics

288. An engine is "reversed" when its direction of running is changed from "over" to "under," or vice versa. This reversal is usually accomplished by a special form of gear or link-mechanism between the valve and main shaft.

289. When the valve and eccentric are direct connected, "reversal" can only be obtained by a wide movement of the eccentric, which will have to be equal at least to the angle $C\ A\ V$, Fig. 180, to secure reversal at all, and will have to be equal to $2\ C\ A\ V$ to secure the same steam-port opening, etc., in reverse running. Eccentrics that move automatically by means of the centrifugal force due to weights in the flywheel, generally have a narrow motion less than the angle $C\ A\ V$, and permit the engine to run in one direction only, but with variable cut-off. In the eccentrics treated below, they will, for completeness of analysis, be assumed to have a wide range of motion from full speed forward or "over," to full speed backward or "under." Theoretically such motion may be considered, although practically it can not be secured in governor-controlled eccentrics on account of structural difficulties.

290. Before taking up the several forms of eccentrics, their action will be reviewed in connection in Fig. 180. $H\ K$ is the engine shaft; C is the center, and $L\ N$ the bounding circle of the eccentric sheave; $W\ Y$ is the eccentric strap; $T\ S$ the eccentric arm which is rigidly fastened to the eccentric strap, and connected at the end T to the valve rod; and the circle $C\ J$ is the path of the center C of the eccentric sheave, the diameter $C\ J$ being equal to the valve travel in this case.

Classification of Eccentrics

291. All eccentrics may be divided into three classes:

1. Fixed eccentrics, in which the eccentric sheave $L\ N$, Fig. 180, is an integral part of the shaft, or is firmly keyed to it. In this class of eccentrics the valve travel is always the same and equal to $C\ J$. Also the angle of advance remains the same and is equal to $H\ A\ C$.

2. Rotating eccentrics in which the sheave turns freely on the

Digitized by Google

engine-shaft under the influence of a flywheel governor. In this group, which is illustrated in Fig. 181, the valve travel remains always the same and is equal to $2\,A\,C$, but the angle of advance varies from $L\,A\,C$ to $L\,A\,D$, etc., according to the load on the engine. The

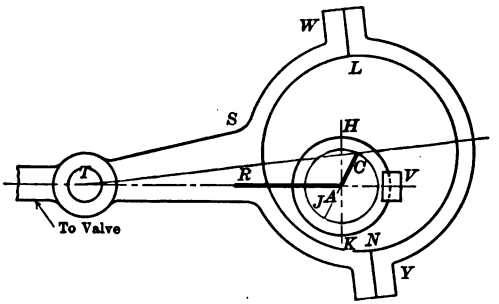

FIG. 180.—"FIXED" ECCENTRIC

double-arm extension shown at $P\,Q$ is rigidly attached to the eccentric sheave and the links from the governor weights connect at P and Q, as shown at $K\,K$ in Fig. 189.

3. Slotted eccentrics, in which the valve travel and the angle of advance both change at the same time automatically, according to the load. Slotted eccentrics are subdivided into,

(*a*) Swinging or curved-slot eccentrics. See Figs. 182, 190, and 191.

(*b*) Straight-slot eccentrics. See Figs. 183, 192, and 193.

In the curved-slot eccentric, an arm $J\,O\,N$, Fig. 182, is rigidly attached to the eccentric sheave and the point O is pivoted on a fly-wheel arm so that the curved slot in the sheave will allow the center point C of the sheave to swing into the positions D, E, or intermediate positions as influenced by the governor. In the straight-slot eccentric two arms are rigidly attached to the sheave and these are caused to move in parallel lines with equal velocities by the shaft-governor mechanism as illustrated in Figs. 192 and 193. Thus the straight-slot eccentric sheave moves across the shaft with a straight, or practically straight, motion.

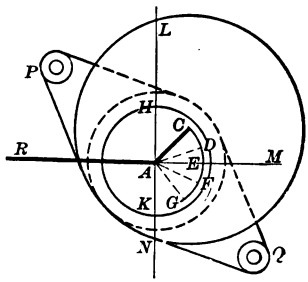

FIG. 181.—ROTATING ECCENTRIC

Digitized by Google

Reversing with Eccentrics

292. To obtain full reversal in an engine with any one of these eccentrics, it would be necessary to move the eccentric-center from *C* (Figs. 181 to 183) to *G*, as may be seen in Figs. 184 and 185, where the eccentric has been moved from *A C* to *A G*. The arrows on the crank show the resultant change in the direction of running. In

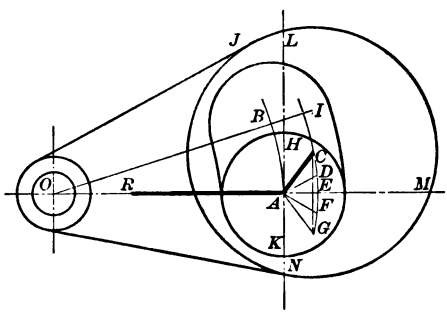

FIG. 182

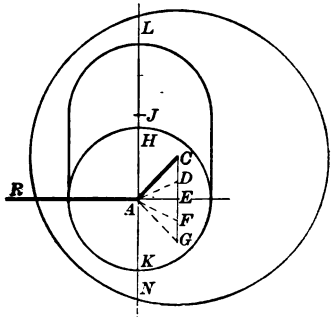

FIG. 183

FIG. 182.—SWINGING OR CURVED-SLOT ECCENTRIC
FIG. 183.—STRAIGHT-SLOT ECCENTRIC

every case, Figs. 181 to 183, *H A C* is the angle of advance and *A C* the half valve-travel for one position of the eccentric; *H A D* is the angle of advance and *A D* the half-travel for another position of the eccentric, etc.

Exercises Showing the Relations between Eccentric Positions and Zeuner Diagrams

293. As essential exercises, the student should here draw diagrams similar to Figs. 184 or 185, assuming the angle of advance and the sizes for all parts:

1. For engine running over, with crank set at dead-center, crank end.

2. For engine running over with straight reversing rocker-arm when the crank is on dead-center, head end.

Other exercises necessary to a full understanding are:

3. The drawing of Zeuner diagrams for head-end only for the eccentric-center positions, *C*, *D*, *E*, and *G* in Figs. 181–183. Draw these diagrams double size and assume the same steam and exhaust laps throughout, and note the effect on lead, and on the four principal crank positions.

Digitized by Google

Effect of Location of Pivot in Curved-Slot Eccentrics

294. In using the curved-slot or swinging eccentric, it makes a difference which side of the shaft the eccentric is pivoted on, as Fig. 186 will show. The solid part of this figure is similar to Fig. 182.

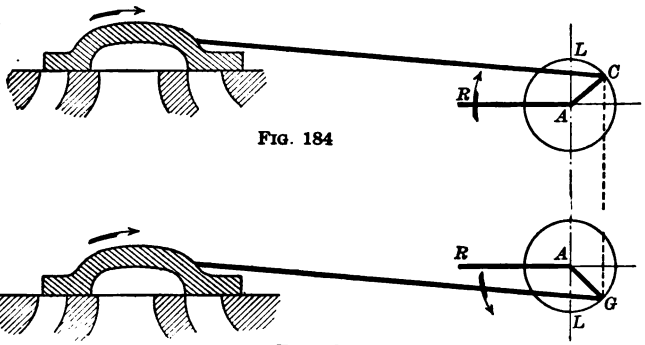

FIG. 184

FIG. 185

FIG. 184.—RUNNING "OVER"
FIG. 185.—RUNNING "UNDER"

The dotted lines are added to represent the eccentric if it were designed to swing about Q instead of O. A is the center of the main shaft. C is the center of the eccentric sheave and, for the position shown, $S\ A\ C$ is the angle of advance, and $A\ C$, the eccentricity.

If the eccentric is moved about O so as to give the angular advance $S\ A\ D$, C will go to D, and $A\ D$ will be the eccentricity.

If the eccentric is moved about Q so as to give the same angular advance $S\ A\ D$, C will go to B, and $A\ B$ will be the eccentricity.

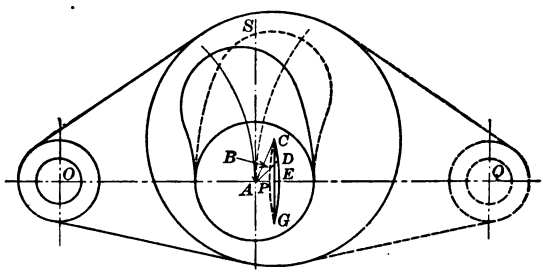

FIG. 186.—SHOWING EFFECT OF LOCATION OF PIVOT IN CURVED-SLOT ECCENTRICS

When C reaches E the engine is in mid gear, and if C were moved to G the engine would be in full gear, running in reverse direction. By constructing a series of Zeuner circles with the angles of advance $S\ A\ C$, $S\ A\ D$, and $S\ A\ E$ (see Figs. 187 and 188), it may be shown

Digitized by Google

that the lead *increases* largely toward mid gear by using pivot *O*, and that it is *reduced* toward mid gear by using pivot *Q*.

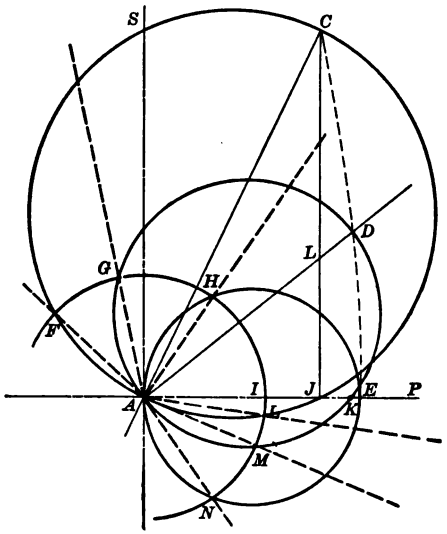

FIG. 187.—SHOWING INCREASE IN LEAD, SWINGING ECCENTRIC

Eccentric Replaced by Swinging Pivots

295. When motion may be taken from the end of a shaft instead of from some point along it, a pivot instead of an eccentric may be used to transmit motion to the valve. Eccentrics, it will be observed, have large sliding surfaces between the sheave and the strap; also, they are extravagant in both space and weight. With these disadvantages of the eccentric it may well be worth while to consider other forms of construction, especially when a wider variation of control of valve motion may be secured.

296. If a simple straight arm were pivoted to the outside of the flywheel at the point *O* in Fig. 182 and if the other end of the arm contained a pin at *C*, *C* would swing in the same arc *C D E* in which the center of the eccentric sheave now swings, and the valve motion would be identical with the two forms of construction. Figs. 197 and 199 show two prominent forms of construction in which pivots instead of eccentrics are used. The governor mechanism is shown in both cases and will be described

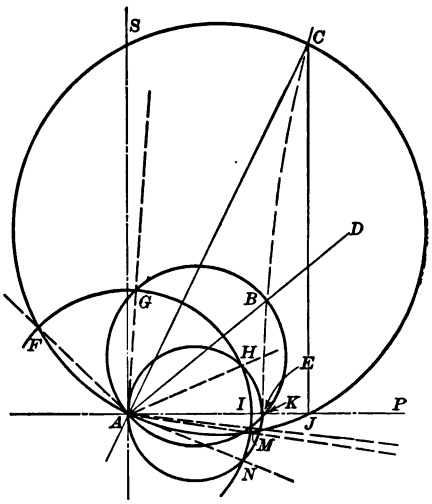

FIG. 188.—SHOWING DECREASE IN LEAD, SWINGING ECCENTRIC

Digitized by Google

later, our present consideration being satisfied by pointing out that G is the pivot to which the rod leading to the valve stem is attached and that the point G, Figs. 198 and 199, swings in an arc $G\ H$ about F as a center. It will be noted that the location of the pivot G in these two cases gives the same characteristic valve motion as the swinging eccentric whose center is at Q, Fig. 186, and also gives a series of Zeuner circles resembling those illustrated in Fig. 188.

Shaft Governors

Examples of Practical Eccentric and Flywheel Governor Construction

297. The Buckeye governor shown in Fig. 189 has a rotating eccentric giving equal valve travel at all cut-offs and rapidly increasing lead with earlier cut-offs. The governor is of the centrifugal type, the weights $W\ W$ swinging out about the centers $O\ O$ against the tensions of the springs $C\ C$. The links $D\ K$ connect the arms $O\ D$, $O\ D$ with the wings attached to the eccentric sheave at $K\ K$. As W moves out the center B of the eccentric sheave rotates about A and increases the angle of advance ($E\ A\ B$), thus giving earlier cut-off. The valve of the Buckeye engine is composed of two parts as illustrated in Fig. 141. The governor and eccentric here described control the auxiliary or cut-off blocks $C\ C$, while the main valve $A\ A\ A\ A$ is moved by another eccentric of the fixed type.

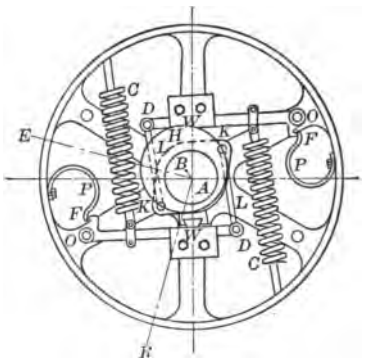

Fig. 189.—Buckeye Shaft Governor, Rotating Eccentric

298. The Westinghouse and the Straight-Line governors illustrated in Figs. 190 and 191 respectively have swinging or curved-slot eccentrics and both give decreasing valve travel with earlier cut-offs. Both eccentrics swing about the point O on the flywheel, the former being moved by the centrifugal weights C and D, which act in unison through the link $H\ K$ against the springs $S\ S$. The link $M\ N$ connects the weight C with the eccentric sheave. The governor is shown with the weights full out in the position due to highest speed. The center O for the swinging eccentric, it will be noted, is symmetrically placed on the crank position $A\ R$. This means that

Digitized by Google

the engine as it starts from rest has slightly increasing lead similar to that shown at *I J*, *I K*, and *I E*, Fig. 187.

299. In the Straight-Line governor, the material in the weighted arm *C D* which swings about *F* is so distributed as to secure the combined action of centrifugal and inertia forces and so move the eccentric about its pivoted point *O*. This governor is shown in its starting position, or for latest cut-off. The center *O* for the swinging eccentric, in this case, is to one side of the crank position *A R* and

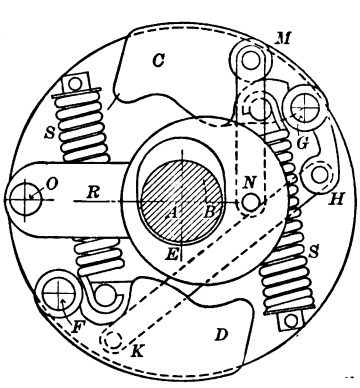

FIG. 190

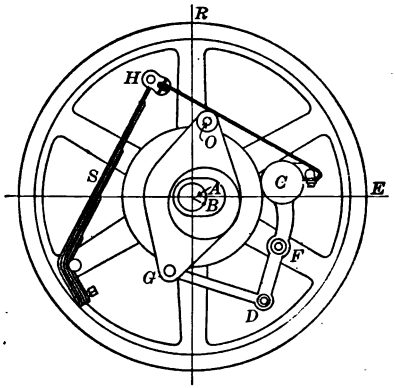

FIG. 191

FIG. 190.—WESTINGHOUSE SHAFT GOVERNOR, SWINGING ECCENTRIC
FIG. 191.—"STRAIGHT-LINE" ENGINE GOVERNOR, SWINGING ECCENTRIC

this causes the center *B* of the swinging eccentric to move in a curved path such that its locus, starting, say, at *C* in Fig. 187, would cross the vertical line *C J* and thus place the point *E* between *J* and *I*, or to the left of *I*. In the Straight-Line engine the point *O* is so taken that the lead is positive from $\frac{7}{8}$ to $\frac{3}{4}$ cut-off and negative at the shorter cut-offs. The purpose of this is to neutralize to some extent the results of too early compression and release on short cut-off and too little compression on late cut-offs, both of which follow to a greater or less degree on slotted eccentrics generally.

300. In the three governors thus far described, *A R* represents the crank position, *A B* the virtual or effective radius of the eccentric. and *E A B* the angle of advance.

301. The governors illustrated in Fig. 192 and 193 operate straight-slot eccentrics, while the governor shown in Figs. 194 to 196 operates a pair of eccentrics in such a way as to secure an action equivalent to that of the straight-slot eccentric.

302. In Fig. 192 the frame *C C* is securely attached to the shaft

Digitized by Google

whose center is O. The position shown is for the engine at rest; as it speeds up the weights W W fly out, and the center of the eccentric sheave A moves straight across and changes the angle of advance, for example, from $D\,O\,A$ to $D\,O\,A'$, and the eccentricity from $O\,A$ to $O\,A'$, preserving constant lead. That constant lead results from a straight-slot eccentric may be seen by considering that the path of the center of the eccentric sheave is the straight vertical line $C\,J$ in Fig. 187, instead of the curved dash line in $C\,D\,E$. Then if the Zeuner circles be drawn on $A\,L$ and $A\,J$ as diameters, the lead for each of these positions, and for the initial position $A\,C$ of the diametral line, will be $I\,J$ in each case and will, therefore, be constant.

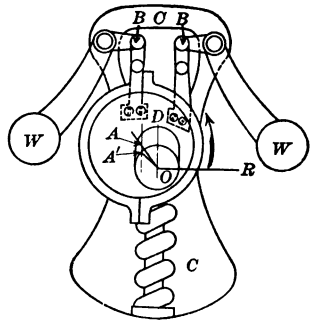

FIG. 192.—GOVERNOR WITH STRAIGHT-SLOT ECCENTRIC

303. Another form of straight-slot eccentric is that manufactured by the Fitchburg Steam Engine Company, illustrated in Fig. 193. The two pins S and E in the eccentric sheave move in short arcs following closely the vertical center line, thus giving to the center B of the sheave approximately the same straight-line motion as is secured by the Watt's parallel motion mechanism. Thus practically constant lead is obtained. The weights $O\,O$ balance the weights of the eccentric and its strap, and also the valve and valve rods in vertical engines, taking the effort to move these parts off the governor. Both the centrifugal weights act in unison through the links $K\,C$, $K'\,F'$ and lever arms $S\,D$, $E\,D'$, to move the eccentric as the engine changes speed. The engine may be made to govern when running in a reverse direction by transferring the ends of the connecting links $K\,C$, $K'\,F'$

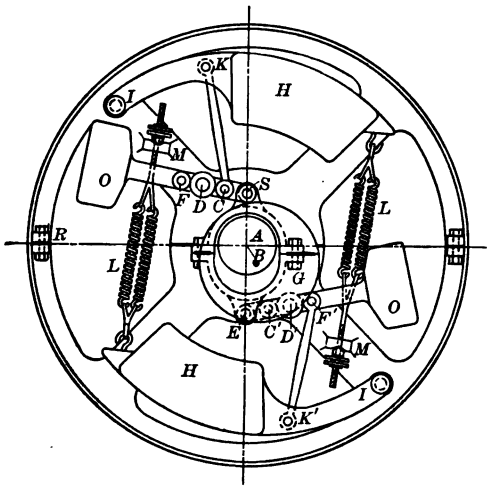

FIG. 193.—FITCHBURG GOVERNOR, STRAIGHT-SLOT ECCENTRIC

Digitized by Google

from C to F and from F' to C' respectively, and putting on a new eccentric sheave, or by changing over the old one so that the slot in the newly arranged sheave will permit the center B of the sheave to be operated within the required range above the horizontal center-line. The governor, in the position drawn in Fig. 193, is at rest or running at very low speed, $R\,A$ being the position of the crank, $E\,A\,B$ the angle of advance, and $A\,B$ the half valve-travel. In this governor both the centrifugal and tangential accelerating forces are employed, but they act in entirely separate capacities through entirely independent weights instead of being combined, as in Fig. 191.

304. The Armington and Sims governor, Figs. 194–196, has a combination of two eccentrics, the first being loose on the shaft and

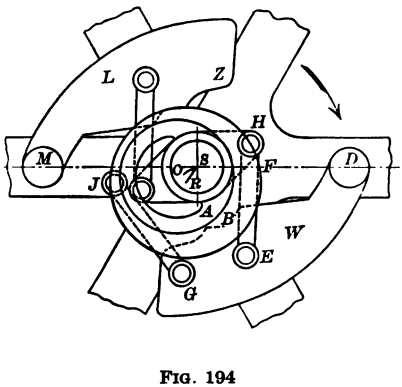

FIG. 194

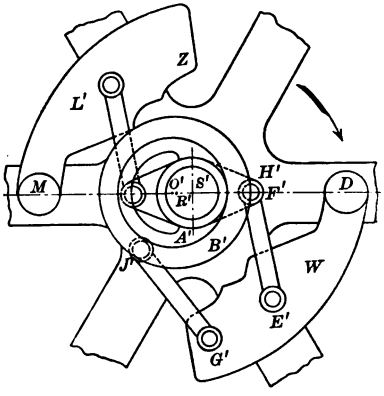

FIG. 195

FIG. 194.—GOVERNOR WITH DOUBLE ROTATING ECCENTRICS, AT REST
FIG. 195.—GOVERNOR WITH DOUBLE ROTATING ECCENTRICS, AT FULL SPEED

the second one surrounding the first. The inner eccentric is connected, through arms and links, to weights W and Z as shown; the outer eccentric is connected to W only. The weights W and Z are pivoted to the arms D and M of the flywheel, which is keyed to the shaft S. Fig. 194 shows the governor mechanism when the engine is at rest, and Fig. 195 running at top speed. In the latter position the governor has a minimum eccentricity, as shown at $S'\,R'$ in Fig. 195, and also in the center-line sketch, Fig. 196, in which S represents the center of the shaft, and the other letters, the corresponding points of Figs. 194 and 195.

When starting up, the eccentricity of the inner eccentric is $S\,O$ (see Figs. 194 and 196), that of the outer eccentric is $O\,R$ with respect to the inner eccentric, and the effective eccentricity of the combina-

Digitized by Google

tion is $S\,R$, the angle of advance being $T\,S\,R$. The proportions of the mechanism are such that the theoretical angle $J\,O\,R$ remains constant.

As the speed of the engine increases, the points E, G, J, O, R, and H go to E', G', J', O', R', and H' respectively and $S\,R'$ becomes the eccentricity and $T\,S\,R'$ the angle of advance. If the path of R ($R\,R'$) is at right-angles to the line of stroke $S\,D$, this combination of eccentrics will give the changes in both eccentricity and angular advance with a *constant lead*, and will be an exact equivalent of a straight-slot eccentric.

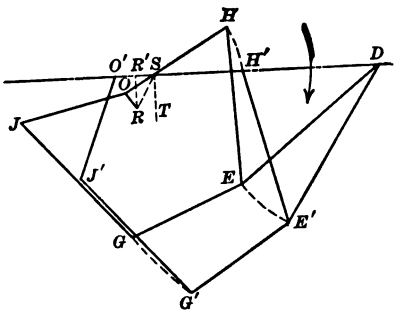

FIG. 196.—SHOWING EQUIVALENT ACTION OF DOUBLE ROTATING ECCENTRICS

305. The above-described governors show the practical applications of the eccentrics as classified on page 146. Two other well-known practical examples of flywheel governors, which use a pivot in place of an eccentric, will also be shown.

306. The first is the American Ball governor illustrated pictorially in Fig. 197, and in skeleton outline in Fig. 198. The governor-arm $B\,C$ is pivoted to the flywheel at A. A link $D\,E$ connects it to a secondary arm $J\,F$ which is pivoted at F to the flywheel. G is a pin on the secondary arm to which the valve-stem rod is attached.

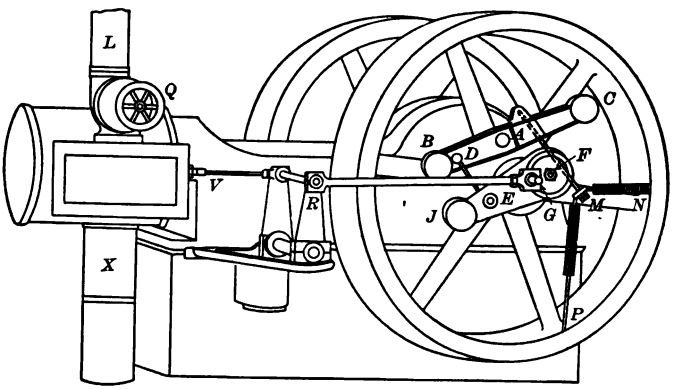

FIG. 197.—AMERICAN BALL ENGINE

Digitized by Google

It may be seen, then, that if $O\,K$, Fig. 198, is the crank, $A\,O\,G$ is the angle of advance and as the engine speeds up, G will move to H on an arc about F, and the characteristic valve action at different cut-offs will be somewhat similar to that obtained by the dash-line eccentric which turns about Q in Fig. 186. And further, the Zeuner diagrams for the several cut-offs will resemble those shown in Fig. 188. This governor is so proportioned that it is in gravity balance throughout the cycle. The center of gravity of the governor arm is to the right of A, while the center of gravity of the secondary arm is to the left of F and practically at the axis of the shaft O so that it will develop no centrifugal force. Another feature of construction recently applied, is the use and arrangement of double springs, as illustrated at $M\,P$ and $M\,N$, Fig. 197, for the purpose of reducing the ill-effects caused by the swaying of single springs due to centrifugal force, and by gravitation.

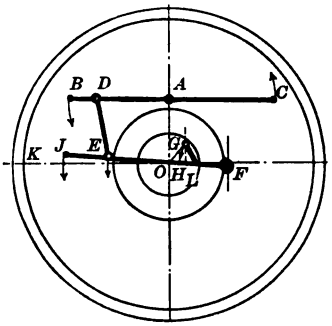

FIG. 198.—SKELETON DIAGRAM, AMERICAN BALL GOVERNOR

307. Another form of construction that is widely known as the Rites governor and which is used on a number of different makes of steam engines, is shown in Fig. 199. It is simple in construction, it operates the valve at different loads similarly to the eccentric shown by dash lines in Fig. 186, and it gives Zeuner diagrams at the different cut-offs which resemble those shown in Fig. 188. It is illustrated diagrammatically in Fig. 199, $K\,O$ being the crank, $N\,O\,G$ the angle of advance, $G\,O$ the half valve-travel, $O\,H$ the lap, and $O\,L$ the lap plus lead. The weighted bar $B\;B$ swings on the pivot F which is secured to the flywheel arm; and its position is controlled by the speed of the engine and counteracting spring $R\,S$.

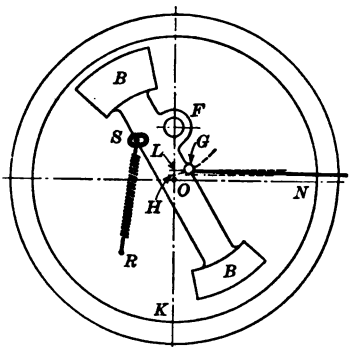

FIG. 199.—RITES GOVERNOR

Digitized by Google

Comparative Indicator Cards from Different Kinds of Eccentrics

308. Comparative results obtained on the indicator card by the different forms of eccentrics operated by shaft governors are illustrated in two of the most used forms, in Figs. 200 and 201. It will be seen, in general, that the compression, W', X', Y', increases very rapidly and becomes very large with the earlier cut-offs; also that the preadmission, N', O', P', increases rapidly in Fig. 200. The release also comes too early with the early cut-off and the compression too late with the late cut-off for smoothest and most economical running. Negative exhaust lap, which is used under some conditions, has the effect of making the compression much later on the earlier cut-offs, and the release earlier.

309. Different makes of shaft governors are designed to meet certain average conditions, and to give best action throughout a certain

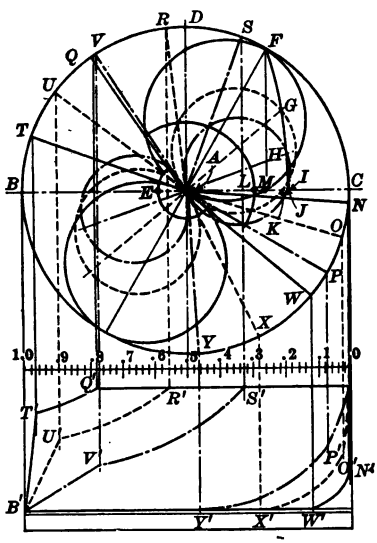

Fig. 200

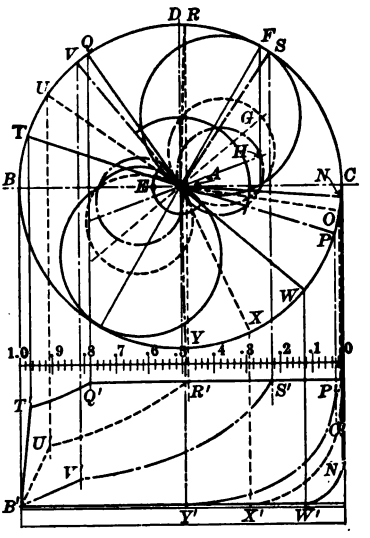

Fig. 201

Fig. 200.—Indicator Cards from Curved-Slot Eccentric
Fig. 201.—Indicator Cards from Straight-Slot Eccentric

range of cut-off, these different designs leading to the claims of different manufacturers. For example, the straight-slot eccentric gives a wider range of cut-off, 0.228 to 0.780 against 0.332 to 0.780 for the curved-slot, Figs. 201 and 200; the curved-slot, a more uniform maximum compression, as may be seen by comparing the

Digitized by Google

points N', O', P' in the two figures; the straight-slot a smaller range of preadmission; the curved-slot more area in the card, etc., etc., for given angles of advance. Some of these points may be construed as advantages or disadvantages, or as lesser evils, according as one sums up all the conditions of a design.

310. The effects on the indicator card are changed by some engine manufacturers from those shown in Figs. 200 and 201, either by placing the locus of the eccentric center for different cut-offs as shown at $C\ E$ in Fig. 188, or by placing the locus approximately in the position that $F\ I$, Fig. 200, would have if the point F remained stationary and I were swung to the left in an arc until it again met the horizontal center line $A\ C$.

311. Since preadmission is, under ordinary conditions, the most powerful factor in "compression," or smooth running over the dead centers, it must be looked to critically in design work. It will be seen from Figs. 200 and 201 that preadmission is always variable, even when the lead is constant, and that the straight-slot eccentric gives the narrower range of preadmission.

312. The *American Electrician*, in the November, 1901, issue, illustrated twenty-two different forms, or makes, of the shaft governor, all making use of centrifugal force, or centrifugal force in combination with tangential and angular-accelerating forces. The *American Electrician* was combined with the *Electrical World* in January, 1906.

Throttling Governors

313. The shaft governor, as has been shown, regulates the speed of the engine by changing the point of cut-off. All governors which regulate in this manner may be placed in one class, and called "automatic cut-off governors." There is another class of governors which regulate the speed of the engine by throttling, or, in other words, by reducing or increasing the steam pressure while the cut-off remains constant. An example of this latter type is shown in Fig. 202, which is an illustration of the Pickering governor. A belt from the engine shaft drives the pulley A, and this rotation is carried through the bevel wheels $B\ B$ and the collar M to the three weights $C\ C\ C$, which are attached to the flat springs $D\ D\ D$. Should the engine get above normal speed, the weights would fly out, and in so doing would draw down the valves $F\ F$ through the collar N and the spindle E, thus reducing the passageway for live steam and consequently the steam pressure. G is live-steam inlet, and H the opening to the steam chest. The valves $F\ F$ are balanced, the steam pressure being on

Digitized by Google

all sides alike. The fly-balls *C C C* and the spindle *E* constitute what is known as the revolving pendulum.

314. The revolving pendulum is also applied as a governor for changing the point of cut-off, as used on the Corliss and other engines and illustrated in Fig. 149, in which *O* is a pulley operated by a belt *N* from the engine shaft. The rotation is carried to the two fly-balls *V V* through a spindle in the post *Y*. As the engine speeds up above normal the balls *V V* fly out, lift the weight *W*, and turn the rocker *S P Q* through a rod *T S* in the post *Y*. The governor rods *L* and *M* are attached to knock-off cams, which, by their oscillation, regulate the point of cut-off, as shown in the explanation of the Corliss valve gear.

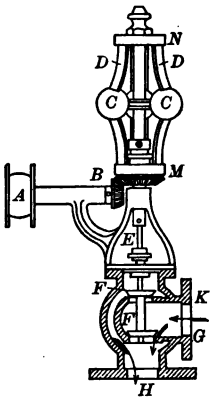

FIG. 202.—PICKERING THROTTLING GOVERNOR

DRAFTING-TABLE PROBLEM, NO. 6.—COMPARISON OF RESULTS FROM STRAIGHT-SLOT AND ROTATING ECCENTRICS

315. Construction of Comparative Indicator Cards: One obtained from an eccentric having a straight slot, which gives a constant lead with a variable travel and angle of advance; the other obtained by rotating an ordinary eccentric, which gives a constant travel with a variable lead and angle of advance.

316. A comparison of the results obtained by the use of the two kinds of eccentrics mentioned in this problem may be shown to best advantage by assuming a concrete example in which both eccentrics are designed to cut off at a given point in the stroke, and then moving each so as to produce cut-off at an earlier point in the stroke.

To facilitate the work the student may refer to the Zeuner diagram of Drafting-Table Problem No. 1, in which the cut-off is at ¾ stroke. Construct the indicator card for the head end for this case, using a live-steam pressure of 80 lbs. gauge, with 2 lbs. back pressure and a 40 spring. Assume a clearance volume of 5 per cent.

In Fig. 203 the dotted construction work is taken from the Zeuner diagram of Problem 1, *C O* representing the crank position for the given cut-off, *D K L* the steam-lap circle, *G F* the lead, and *D E F* the Zeuner circle.

To construct the Zeuner diagram for the rotating eccentric for any other cut-off, such as at *O J*, draw *K M* perpendicular to *O J*,

Digitized by Google

and the arc $N\,E\,P$ with $O\,E$ as a radius. The intersection of $K\,M$ with this arc gives the point R, the extremity of the diameter of the Zeuner circle for cut-off at $O\,J$.

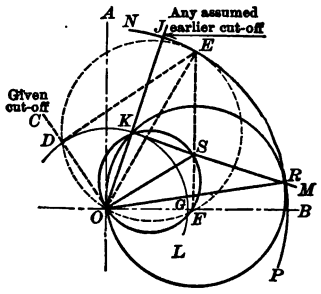

FIG. 203.—RELATIVE ZEUNER DIAGRAMS FOR ROTATING AND STRAIGHT-SLOT ECCENTRICS

To obtain the Zeuner diagram for the straight-slot eccentric for cut-off at $O\,J$, for example, locate the point S at the intersection of $K\,M$ with $E\,F$, $E\,F$ *being the line of constant lead.* Then $O\,S$ equals the diameter of the Zeuner circle for the straight-slot eccentric cutting off at $O\,J$. In this problem take $O\,J$ for cut-off at 0.30 stroke and construct superimposed indicator cards for the two cases.

317. Draw in the symmetrically situated Zeuner circles for the complete revolution, and locate and designate the piston positions for all events of the stroke. Enter the results in a table as follows:

METHOD OF GOVERNING	Angle of Advance	Travel of Valve	Lead	PER CENT OF STROKE COMPLETED WHEN			
				Admission Begins	Cut-off Takes Place	Release Begins	Compression Begins
Both eccentrics at ... cut-off							
Rotating eccentric at ..... cut-off							
Straight-slot eccentric at ... cut-off							

Digitized by Google

SECTION VII.—PRACTICAL STEAM ENGINE VALVE GEARS

328. Link motions are extensively used in engines where reversals in the direction of running, variable speeds, etc., are required. This occurs chiefly in locomotives, marine engines, rolling-mill engines, etc. Of all the link motions the Stephenson has been, perhaps, the most largely used. It is illustrated in Fig. 214, which represents, in a diagrammatic manner, its application to the locomotive.

Stephenson Gear

329. The explanation of the action, in a general way, is as follows: For the position shown, the valve is being operated, through the rocker, by means of the forward eccentric only. This is evident from the fact that the slide block, which is pivoted to the end of the rocker arm, is in direct line with the forward eccentric rod; in this

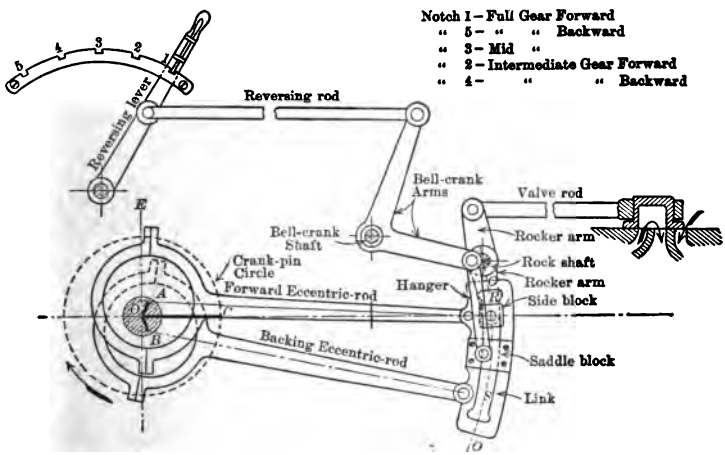

Fig. 214.—Stephenson Valve Gear

position the backing eccentric rod has no influence on the valve motion.

If, now, the reversing lever be moved so as to clasp in notch 2, the link, through the reversing rod, bell crank, and hanger, will be raised so that the saddle-block pin is closer to the slide-block pin. The slide block, which will then have a motion due to both eccentric rods, will

Digitized by Google

have a shorter horizontal swing, and the valve consequently will have less travel, less port opening, earlier cut-off, and will furnish less power to the engine.

With the reversing lever in its central position, or notch 3, the saddle-block pin and the slide-block pin will be over each other, and the travel of the valve and port opening will be a minimum.

Method of Reversing

330. The link and the connections are so designed that when the reversing lever is moved to notch 4 the backing eccentric rod is raised so as to be in line with the slide-block pin, which is thus drawn to one side or the other, except when the engine is on dead center. This causes the rocker to turn on its shaft, and move the valve to the right or left to such an extent that the opposite port may open to steam and reverse the engine. When the engine is on dead center the slide block and valve will remain nearly stationary when the link is raised or lowered and the cylinder on the opposite side of the locomotive with its crank at 90° must be relied upon to start up.

A Valve Gear at any One Setting Equivalent to an Eccentric

331. The link, operated by two fixed eccentrics, is, for any one phase or notch setting, a mechanical equivalent for a single curved-slot eccentric. Such an equivalent eccentric is sometimes called a virtual eccentric. The link, however, has an advantage over the latter, in that it is capable of such adjustment that practically nullifies the irregularity of cut off and exhaust closure due to the angularity of the connecting rod. The fact that any one setting of a valve link-gear mechanism is practically equivalent to a single eccentric is illustrated and explained in Drafting-Table Problem No. 7.

ANALYSIS OF A LINK MOTION BY THE AUCHINCLOSS METHOD, CONDENSED

332. A more definite idea of the complex action of the link and its connecting mechanisms is shown in a graphical manner by the method given by Auchincloss, as illustrated in Figs. 215, 216, and 217. Fig. 215 is a center-line reproduction of Fig. 214, the line *O S R O* of the template in Fig. 215 corresponding to the center line *O S R O* of the link in Fig. 214.

In Fig. 216 the lines *0 0*, *1 1*, *2 2*, etc., represent the successive

Digitized by Google

positions of the center line $O\,S\,R\,O$ of the link during one cycle. The curves $U\,V$ and $W\,X$, which are envelopes of the link-center lines of Fig. 216, are reproduced for clearness in Fig. 217. The length of the horizontal line included between these two curves measures the limits of the horizontal travel of the link. For example, if the slide-block pin is at H the valve travel is $Y\,Z$, and the travel of the saddle-block pin is $P\,T$.

Detail Construction

333. Briefly, the order of construction for the illustrations thus far referred to is as follows, keeping in mind that all that is shown in Figs. 215, 216, and 217 should be developed step by step on one single figure. The figures are separated here to avoid complication of line work.

In Fig. 215 take O' for the shaft center and $O'\,C$ for the crank on dead center. Lay off points A and B (according to the angle of advance) as the eccentric-center positions for crank at $O'\,C$, and draw the eccentric-center circle. With the length of the eccentric rods ($A\,M$ and $B\,N$) and the dimensions of the link template ($M\,N$, $M\,R$, and $N\,S$) given, the eccentric rods and template may be drawn in position as shown for the engine on dead center. Then taking the lap plus lead from the angle of advance at A, lay it off from the template edge at R to H. From H draw the vertical line and on it lay off the given distance from H to G (the rock-shaft center). The line $H\,G$ is then the position of the rocker when the valve is central, and $G\,R$ is the position of the rocker arm after the valve has moved off center a distance equal to the lap plus the lead. (This position is represented in Fig. 214, where the small port opening shown represents the lead. It will be noted that the crank $O\,C$ is on dead center, as it should be for this position of the valve.)

Lay off $R\,L$ = lead; then $H\,L$ is the lap. For illustration, assume the lap to be $\frac{2}{3}$ (lap + lead). Then with the center line of the rocker arm at $G\,L$ the valve will have moved a distance off center equal only to the lap, and admission will have begun.

334. The next step in the layout of a problem by this method consists in cutting a template of some suitable material, with the center line $O\,R\,S\,O$ of the link as its right-hand bounding line, and with notches at M, N, and Q, corresponding to the two eccentric-rod pin points and the saddle-block pin point. This latter point must always lie on the arc $Q'\,Q\,Q''$ described about F as a center, and the points M and N must always lie on arcs described with the eccentric rods as radii in their successive positions. The exact location of F

Digitized by Google

depends on frame-work construction, and in this problem may be assumed approximately as shown. The lines on which M and N must always be found are obtained as follows: Divide the eccentric circle, Fig. 216, into a convenient and sufficient number of parts

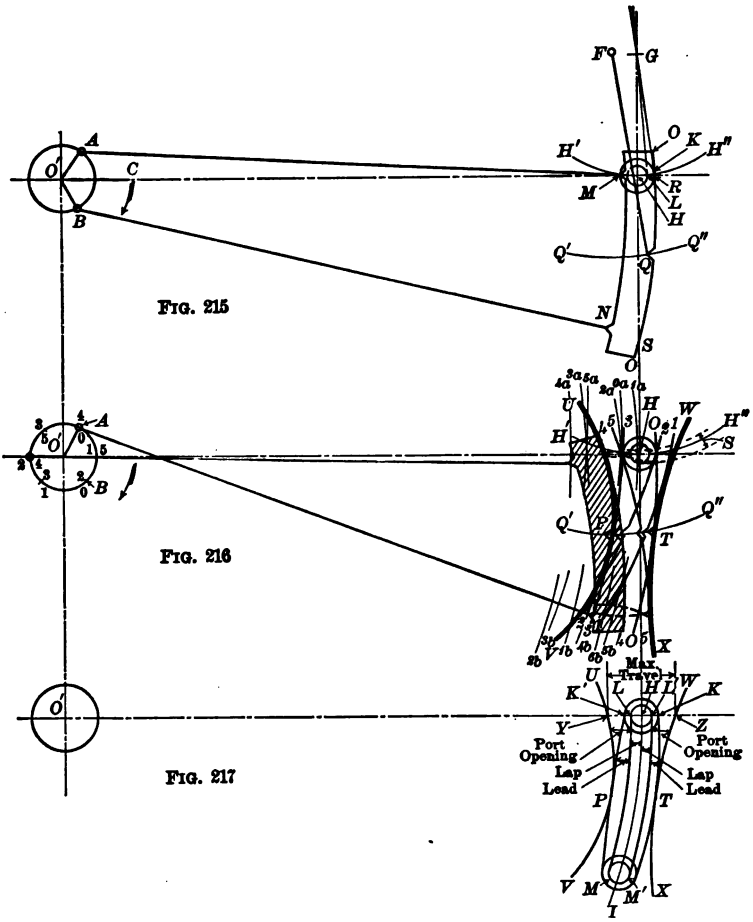

FIGS. 215–217.—ANALYSIS OF STEPHENSON LINK MOTION

depending upon the accuracy required—six are shown in this case. These divisions are laid off in the direction of rotation, first from A for the forward eccentric, and then from B for the backing eccentric. From each of these division points, draw the arcs, 1a, 2a, and 1b, 2b, etc., using the eccentric-rod length as a radius. These arcs will contain the points M and N of the template in its successive positions

Digitized by Google

and in addition the point Q of the template must always lie on the arc $Q'\ Q\ Q''$. The template may now be adjusted for the six positions, thus giving the lines, *0 0, 1 1, 2 2, 3 3, 4 4,* and *5 5* in Fig. 216. Draw envelopes to these curves as shown at $W\ X$ and $U\ V$.

335. In Fig. 217 these envelopes are reproduced. Draw the arc $H\ I$ with a radius $O'\ H$. With H as a center draw the lap, and lap + lead circles, with H *L* and $H\ K$ as radii, respectively. Draw similar circles at M. Then with O' as a center draw the arcs $L\ M$ and $L'\ M'$; the travel of the slide-block pin from the center arc $H\ I$ to $L\ M$ or to $L'\ M'$ is, approximately, just sufficient to take up the outside lap of the valve. Draw a curve tangent to the lap + lead circles at the top and bottom, and also tangent to the envelopes at P and T; the travel of the slide-block pin between the two curves $H\ I$ and $K\ T$ is just sufficient to move the valve a distance equal to the lap plus the lead. Since the arcs $K\ T$ and $K'\ P$ are not parallel to $H\ I$, the lead will vary with the different elevations of the link. The distance from $L'\ M'$ to $W\ X$ is the port opening and it is variable.

"Slip"

336. In the practical adjustment of the link and its connecting mechanism for precise work, one great difficulty arises on account of the "slip" which occurs between the slide block and the link. This slip is shown in Figs. 215 and 216 as follows:

The upper dotted loop shows the path of the point R on the surface of the link during one revolution of the crank. A corresponding point of the surface of the slide block can only travel in the arc $H'\ H\ H''$ about G. It follows, therefore, that slip during one revolution equals the distance S, Fig. 216.

In planning a link motion it is necessary to reduce this slip as much as possible, on account of wear. When the link is in such a position that the saddle pin is directly over the slide-block pin, the slip is comparatively small.

Open and Crossed Rods

337. Links may be connected with the eccentrics in two different ways, either by "open rods," as shown in Fig. 218, or by "closed" or "crossed" rods, as shown in Fig. 219. When the centers of the two eccentrics (A and B) lie between the shaft and the link, and the projections of the rods do not intersect, the rods are said to be "open." When the eccentric centers lie between the shaft and the link, and the projections of the rods cross each other, the rods are said to be "crossed." It should be noted that the position of the

Digitized by Google

crank has nothing to do with open or crossed rods, and it is not safe, in general, to base a definition of open and crossed rods on the crank

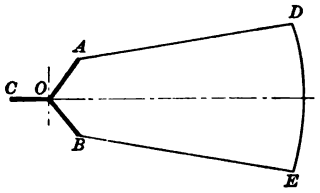

FIG. 218.—"OPEN" RODS

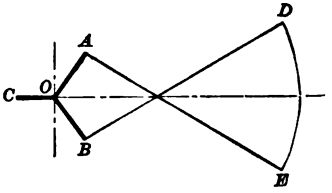

FIG. 219.—"CROSSED" RODS

position as is frequently done, as the valve gear may include a reversing rocker.

338. Other things being equal, open and crossed eccentric rods give quite different steam distributions. In Fig. 220 the link is shown in position *1* in full gear, and in position *2* in mid gear. It will be seen that the lead for full gear is $D\,E$, and that for mid gear it is $-\,E\,F$. In other words, the lead decreases from full to mid gear, even to negative lead sometimes, as shown in this case, with crossed rods. With open rods the lead increases from full to mid gear, being shown equal to $J\,K$ for full, and equal to $J\,L$ for mid gear, in Fig. 221. The effect of short open rods is to increase the lead more rapidly, as also shown in Fig. 221, where $M\,P$ is greater than $J\,L$.

Stopping Engine by Placing Valve Mechanism in Mid Gear

339. Inasmuch as the half-travel of the valve in mid gear is equal only to the lap + lead (Fig. 217), if the lead for mid gear is

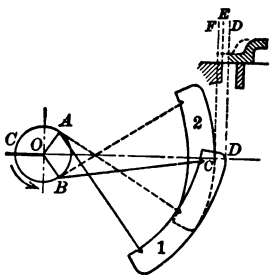

FIG. 220.—SHOWING EFFECT OF CROSSED RODS ON LEAD

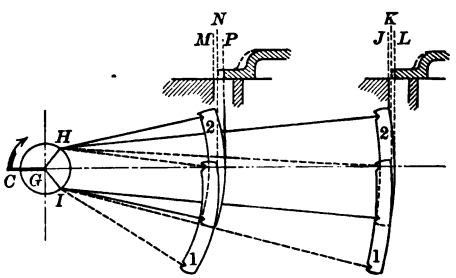

FIG. 221.—SHOWING EFFECT OF OPEN RODS ON LEAD

zero, or a minus quantity (as represented in Fig. 220), it will be observed that the half-travel of the valve is equal to, or less than,

Digitized by Google

the lap of the valve in crossed rods; in which cases steam will not be admitted to the cylinder. Therefore, in a crossed-rod design where the lead at full gear is small enough, it is possible to shut off steam by placing the link in mid gear. With open rods this can not be done, no matter how small the full-gear lead, for the reason that, as has been stated, the lead increases from full to mid gear, and therefore the steam ports are open a definite amount for every setting of the link when the engine is in dead center. In practice, generally, open rods are used, and the lead for mid-gear position ranges from $\frac{1}{4}$ inch to $\frac{1}{2}$ inch with a common value $\frac{3}{8}$ inch, while the full-gear lead ranges from $\frac{1}{16}$ inch to $\frac{3}{16}$ inch, governed principally by the length of the eccentric rod.

340. Several practical considerations in connection with link mechanism should be pointed out:

1st. That the bell-crank shaft must be situated a sufficient distance above or below the center line of motion so that the eccentric rods do not strike it when raised or lowered to full gear.

2d. The hanger should be of such length that the link will not conflict with the bell crank in any position. The length of the bell-crank arm is usually equal to, or greater than, the hanger.

Relation Between Center Lines of Link Mechanism and Engine Cylinder

3d. So long as the angular advance of the eccentric is laid off from a line at right angles to the central line of the link motion, the latter may be arranged to any inclination to the piston motion without affecting the action of the link. In Fig. 214 the center lines of the link motion and the piston motion coincide. With proper mechanical connections the valve motion would remain the same if the link, eccentric rods, and eccentric sheaves were considered rigid with respect to each other, while they were turned through any desired angle about O as a center, the center line of the engine remaining fixed.

To Design a Stephenson Valve Gear

341. Although the Stephenson gear continues to be largely used in marine and other types of engine construction, it is being quite rapidly displaced in high-powered locomotive work, largely on account of the inaccessibility of the parts, and also the inertia of moving parts which must be necessarily large and heavy. Other considerations, such as detail of design and effectiveness of steam

Digitized by Google

distribution, are also to be taken into account, but these can not be explained to advantage until a further study of valve-gear construction is followed through.

342. Space and time prohibit such an exhaustive analysis of all valve-gear mechanisms such as is given in the present case to the Stephenson gear, and it is, therefore, pointed out in this place that an understanding of this Stephenson analysis, together with a description of other forms of valve gears, should enable a student to make a similar exhaustive graphical analysis of any other case that might be presented.

343. In order to make a direct and practical application of the graphical method involved in laying out a Stephenson link motion for an actual case, let the following data be given:

Ratio of crank to connecting rod = 1 : 7½.
Eccentric circle diameter = 5½ inches.
Maximum cut-off = 0.92 stroke.
Center to center of eccentric pins (M to N of Fig. 215) = 13 inches.
Center of eccentric pin back of link arc ($M\,K$ and $N\,S$, Fig. 215) = 3 ins.
Mid-gear lead = ⅜ inch.
Length of hanger = 18 inches.
Exercise Problem: Find the steam lap, full-gear lead, point of suspension of link, and location of tumbling shaft.

344. The mid-gear lead is given in this problem for the reason that the valve travel is least at mid gear, as may be seen in Fig. 216 or 217, and the lead therefore constitutes a much larger percentage of the steam-port opening near mid gear than it does in full gear. In fact, at mid gear the lead and steam-port opening are the same.

345. In designing link motions for actual service it must be kept in mind that the work can not be carried out from start to finish with mathematical precision, but that approximations must be made in several of the steps, and finally, adjustments made to secure the desired results.

To Find Mid-Gear Travel

346. The first step in the design will be to find the mid-gear travel of the valve for the assigned conditions. Special directions for doing this will be found in the succeeding paragraph, the general plan being to lay off the eccentric centers F and B, Fig. 222, for the forward and backing eccentrics (for a 92 per cent cut-off) when the piston is at one end of the stroke, and f and b likewise when the piston is at the other end of the stroke. Then, taking the eccentric-rod lengths and a template (such as in Fig. 224) whose edge coincides with the

Digitized by Google

center-line curve of the link, the extreme positions of the link arcs $y\ z$ and $y_1\ z_1$, Fig. 223, may be found by placing the eccentric cen-

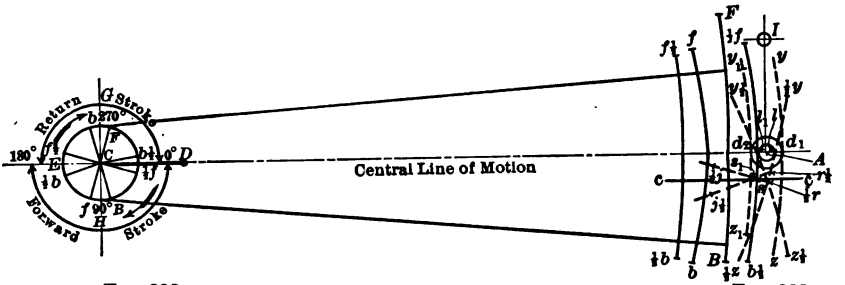

FIG. 222 FIG. 223

FIGS. 222 AND 223.—DETERMINING MID-GEAR TRAVEL, LAP, AND SADDLE-PIN POSITION

ters at F and B, and f and b, respectively, thus giving $d_1\ d_2$ as the travel in mid gear.

347. In following the general plan outlined in the preceding paragraph the student may need to refer to the following directions as to detail: Figs. 222 and 223 are connected, the distance from the point F in Fig. 222 to the arc F in Fig. 223 being equal to the length of the eccentric rod, which is 46¼ inches (49¼ inches − 3 inches). The angle $G\ C\ F$ is the angle of advance for 92 per cent cut-off, and is found to be equal to about 17 degrees for this problem.

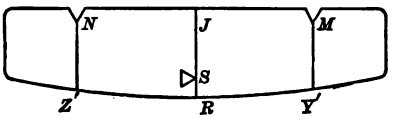

FIG. 224.—LINK TEMPLATE

348. The reason for connecting 17 degrees angular advance with 92 per cent cut-off may be explained by the following independent example according to explanation on pages 5 and 6: Given the crank $A\ C$, Fig. 225, and the eccentric $A\ B$ with an angle of advance of 20 degrees. If we neglect lead, and give the valve a steam lap equal to $B\ D$, the steam port will just be opening at the crank position shown. When the eccentric $A\ B$ gets to $A\ F$, which also makes an angle of 20 degrees with $A\ H$, the steam

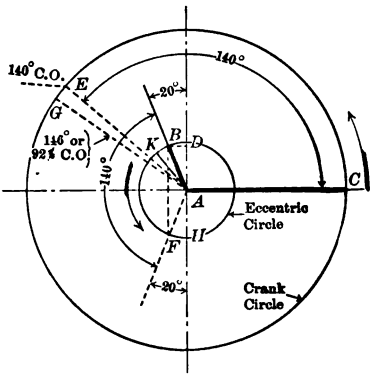

FIG. 225.—FINDING ANGLE OF ADVANCE FOR A GIVEN CUT-OFF

Digitized by Google

port is just closing and the eccentric has traveled 140 degrees. The eccentric and crank being rigidly connected, the latter has also traveled 140 degrees when cut-off takes place. If, therefore, the position of the crank at cut-off is given in a problem, as 140 degrees, for example, it may be shown that the angle of advance necessary to secure this equals ½ (180 degrees − 140 degrees) = 20 degrees, if lead is neglected. If the lead angle is taken into account, and is, say, 10 degrees, as shown at *B A K*, Fig. 225, then the cut-off will occur 10 degrees sooner with the same lap, or at 130 degrees, as may be seen by a study of Fig. 225. There being no reversing rocker in this explanation, the eccentric precedes the crank, and the angle of advance is laid off ahead of 90 degrees.

349. The student should note and understand that on account of the reversing rocker which is used with the Stephenson link, the eccentric must follow instead of precede the crank, and that the actual angle of advance must be laid off back of 90 degrees instead of in advance of it.

350. As the whole design is approximate, and the full-gear lead smaller than ⅜ inch but not yet definitely known, it may be neglected in laying out the eccentric positions *F* and *B* in Fig. 222 (for the crank at *C D*) and *f* and *b* (for the crank at *C E*).

Since the eccentric-rod pins are 3 inches back of the link arc, the eccentric rod itself is 49¼ inches − 3 inches or 46¼ inches long. With this as a radius, strike the arcs *F*, *B*, *f*, *b*, of Fig. 223, with the corresponding points of Fig. 222 as centers. Then construct a template having a link arc of 49¼ inches radius, and with incisions as shown at *M* and *N* of Fig. 224, 13 inches apart and 3 inches back of the link arc. Mark the point *J* midway between *M* and *N*. Then adjust the template on the arcs *F* and *B*, Fig. 223, and draw the link-arc position *y z* for mid gear. Similarly with the arcs *f* and *b* find the link-arc position $y_1 z_1$. With the template in this position draw *J R*, Fig. 224, coincident with the central line of motion *C A*. Also draw *M Y′* and *N Z′* parallel to *J R*. The arcs *y z* and $y_1 z_1$ cross the center line of motion at d_1 and d_2, which therefore measure the valve-travel at mid gear. The point *A*, midway between d_1 and d_2, determines the location of the rocker shaft. It should be observed that the distance *C A* is now slightly more than the assigned value of 49¼ inches, due to the curvature of the link arc. This increase, however, is neglected in practice, and *A I* is taken as the position of the rocker arm when the valve is central.

Digitized by Google

To Find the Lap of the Valve

351. From d_1 and d_2, Fig. 223, lay off the given mid-gear lead of $\frac{3}{8}$ inch equal to $d_1 l$ and $d_2 l_1$, and draw the circles $l l_1$ and $d_1 d_2$. $A l$ is the steam lap, $l d_1$ the lead, and $A d_1$ the half-travel for mid gear.

To Find Position of Center of Saddle Pin for Equalized Cut-off at Half Stroke

352. The location of the saddle-pin center is, perhaps, the most important feature in the design of a link motion, and should be carefully selected. By a proper determination of its location the cut-off on the two ends of the cylinder may be practically equalized for any single point in the stroke.

353. Inasmuch as the inequality due to the crank angles is greatest at about ½ stroke, the irregularity of cut-off will be greatest for this position unless corrected. This design will, therefore, be laid out to give equal cut-offs at one-half the stroke on each end of the cylinder, with a symmetrical valve.

When the piston is at ½ stroke the crank pin D, Fig. 222, will have advanced a little less than 90° forward stroke, and a little more than 90° on the return stroke, and the eccentric centers F and B will have advanced correspondingly. Find these two angles, and lay the forward one off from F and B, thus obtaining ½ f and ½ b, and the return-stroke angle from f and b which will give the points f ½ and b ½. With the four points just found, as centers, and with a radius equal to the eccentric-rod length (46¼ inches), describe the arcs ½ f, ½ b, f ½, and b ½, Fig. 223. Adjust the template with M and N on the arcs ½ f and ½ b, respectively, and with the link arc passing through l. This will give the position (½ y, ½ z) for the link arc for ½ cut-off in the forward stroke. Mark the position of $J R$ of the template at ½ j, ½ r on the diagram. In a similar manner y ½, z ½ and j ½, r ½ may be found for the position of the link arc for ½ cut-off on the return stroke. The link is now shown in the two positions for equalized cut-off, and inasmuch as the point of suspension in locomotive practice is usually at the center of the link, the saddle-pin center must be found on the lines ½ j, ½ r and j ½, r ½. It must, of course, be the same distance from the link arc in each position. Therefore, locate the two points s and s_1 at equal distances from ½ r and r ½, respectively, and of such length that a line $c c$ parallel to the central line of motion may be drawn through them. This line represents the path of the travel

Digitized by Google

of the saddle-block pin, and is in reality an arc with the hanger as the radius. For the short distance $s\ s_1$ it may be considered a straight line. Having determined the point of suspension of the link make the incision S on the template. (See Fig. 224.)

To Locate the Bell Crank or Tumbling Shaft for Equalized Cut-Off at All Points of Stroke

354. The cut-off has now been equalized for ½ stroke where the inequality due to the connecting-rod angles is naturally at its maximum. The influence of this inequality becomes less and less as

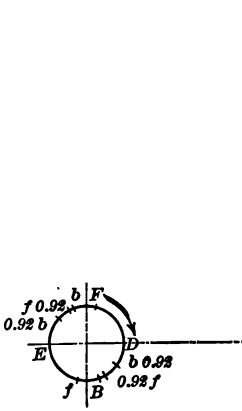

FIG. 226

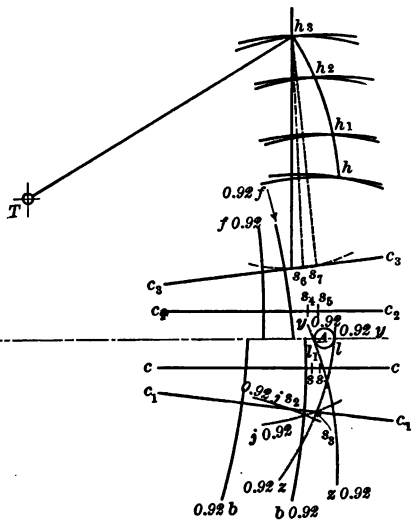

FIG. 227

FIGS. 226 AND 227.—LOCATING BELL-CRANK SHAFT FOR EQUALIZED CUT-OFF

the cut-off grows later, and therefore if the maximum desired cut-off (in this case 0.92 stroke) be equalized, all intermediate cut-off positions between mid and full gears will practically be equalized. This may be accomplished by working out the proper location of the tumbling shaft T, Fig. 227.

Figs. 222 and 223 might be used for this work, but it would complicate the diagrams too much. Therefore, on a new diagram lay off F, B, f and b with the *same values* as before; and find positions $0.92\,f$, $0.92\,b$, $f\,0.92$ and $b\,0.92$, Fig. 226, for the eccentric centers when the piston has traveled 0.92 of its stroke, in the *same manner* as $\frac{1}{2}f$, $\frac{1}{2}b$, etc., were found for ½ stroke. Then with the same

Digitized by Google

eccentric-rod radius as before, describe the arcs 0.92 *f*, 0.92 *b*, *f* 0.92 and *b* 0.92 in Fig. 227. Adjust the template so that *M* and *N* fall on the arcs 0.92 *f* and 0.92 *b*, and the link arc passes through *l*. Draw the arc 0.92 *y* 0.92 *z* and mark the point s_2 through the point *S* on the template. This, then, is the position for the link at 0.92 cut-off running forward. Do the same for 0.92 cut-off on the return stroke, and mark the position s_3. Join s_2 and s_3 by a straight line c_1c_1, which will be found to have a slight inclination to the central line of motion, but too small to produce much ill effect. It could be made parallel by placing s_2 and s_3 nearer the link arc, but this would destroy the equality of cut-off at ½ stroke.

The saddle-pin locations s_4 s_5 and s_6 s_7 for equal cut-offs in back gear could be found if necessary, but in most locomotive work the back gear is a counterpart of the forward gear, and these points may consequently be placed symmetrically with respect to s s_1 and s_2 s_3.

355. Having determined the stud positions for equalized 50 and 92 per cent cut-offs, it only remains to suspend the hanger in such manner that for the several elevations its opposite end will sweep through the corresponding positions of s s_1, s_2 s_3, etc. With an assumed length of hanger (which is usually determined by the space available) as a radius, and with s_2 s_3 as centers, strike arcs intersecting at *h*. In a similar manner, with the other three sets of points, obtain h_1, h_2 and h_3. These points will not fall on the arc of any circle, but an approximate one may be found which will give a center at *T*, and this point will be the center for the bell-crank shaft.

To Find the Lead on the Forward and Return Strokes in Full Gear

356. With the points *F*, *B*, *f* and *b* sweep arcs *F*, *B*, *f* and *b* on a new diagram (not shown here) similar to those in Fig. 223, and adjust the template with *M* and *N* on *F* and *B*, and with *S* on c_1 c_1 of Fig. 227. Mark the point in which the link arc intersects the line of motion. (Figs. 226 and 227 are necessarily drawn on such a small scale that instead of further complicating these figures by drawing in this construction we will show the *results* of the construction called for in this paragraph in the separate Fig. 228.) The distance of this point to *A*, minus *A l*, will be the lead (equal *l d*) at full gear on the forward stroke. In the same manner, by using arcs *f* and *b*, the lead on the return stroke full gear may be obtained equal to l_1 d_3. These leads (*l d* and l_1 d_3) will be found to be slightly

Digitized by Google

unequal, but on account of the large port opening at full gear, the effect of their inequality may be neglected.

To Find Extreme Travel of the Link and the Slip

357. With the template in position on the arcs f and b as called for in the previous paragraph, the point Y' (Fig. 224) on the link arc will have its greatest elevation for full-running position, as represented at $y_3\ z_3$ in Fig. 228. The forward eccentric has its greatest throw when F is at D, Fig. 226, then B is to the left an amount corresponding to the arc $F\ D$, and the link is in its greatest inclined position, as represented by the link arc $y_4\ z_4$ in Fig. 228. For this position the point p of the link arc is on the rock-shaft arc, and is the distance $p\ y_4$ from Y' on the template. For position $y_3\ z_3$ the point d_3 of the link arc is on the rock-shaft arc. The maximum slip is, therefore, $p\ d_4$.

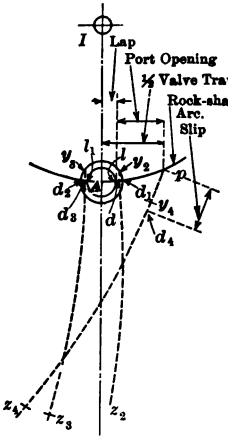

FIG. 228.—SHOWING LEAD, SLIP, AND HALF-TRAVEL FOR STEPHENSON LINK GEAR

Further detail and fuller descriptions for laying out this link motion graphically is given by Auchincloss on pages 90 to 135 in his treatise on "Link and Valve Motions."

Use of Models in Construction of Valve Gears

358. In many places the design of valve-gear mechanism is carried on entirely or in part by means of models, the parts of which may be varied in size or position or both until satisfactory valve motion is secured.

LINKS

Classification and Types

359. Links, in general, may be classified in two independent ways:

1. With reference to their suspension, into "shifting" and "stationary" links.

2. With reference to their form, into the "box" link, Fig. 229; the "open" link, solid, Fig. 230; the "open" link, built up, and more generally known as the "skeleton" link, Fig. 231, and the "double-bar" link, Fig. 232.

Digitized by Google

Shifting and Stationary Links

360. The "shifting" link is represented in the Stephenson gear, Fig. 214; the "stationary" link in the Gooch gear, Fig. 235, and the Walschaert gear, Fig. 240. A "shifting" link is distinguished by the fact that the link itself is moved up or down to secure variable cut-off or reversal; in the "stationary" link the "radius-rod" instead of the link is moved to secure variable cut-off or reversal.

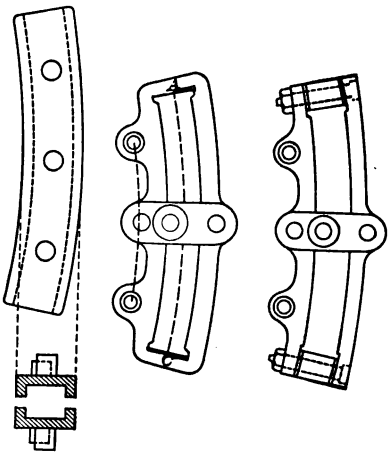

FIG. 229 FIG. 230 FIG. 231

FIGS. 229–231.—PRACTICAL FORMS OF LINKS

Forms of Links in General Use

361. The forms of links most used in American practice are shown in Figs. 230, 231, and 232. In the link shown in Fig. 230 the eccentric-rod pins may be placed on extensions of the link arc $A\ C$, in which case the diameter of the eccentric circle must be greater than the travel of the valve. The "double-bar" link, as shown in Fig. 232, is applied principally to marine engines; its action is shown in Fig. 233, in which L is the link, P and Q the eccentric rods, M the side or bridle rods, N the rock-shaft arm, O the rock shaft, or weigh shaft.

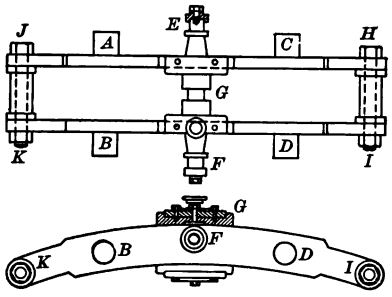

FIG. 232.—STEPHENSON DOUBLE-BAR LINK, TOP AND FRONT VIEWS

The end of the rock-shaft arm is provided with a block operated by a screw so that the valve may be adjusted without moving the weigh shaft. The line of motion of this block is so designed that when the link is in position for full gear forward the axis of the screw and consequently the movement of the block will be in line with the bridle bars, and any adjusting motion will be communicated without loss.

Digitized by Google

The eccentric rod P (Fig. 233), by means of forked ends, is connected to the pins A and B, Fig. 232, and similarly Q is connected at C and D. G is the link block through which the link slides, and to which the valve stem is directly attached; and E and F, the pins to which the bridle rods are connected. The pins E and F are independent of the link block, and may be placed at the center as shown, or at the ends as extensions of $H\,I$, or $J\,K$, or at intermediate positions according to the requirement of the design.

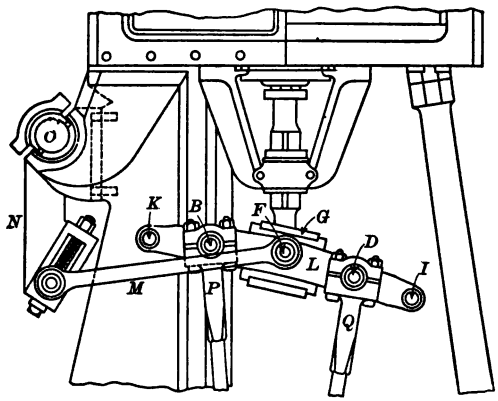

FIG. 233.—ARRANGEMENT OF STEPHENSON LINK AND ROCK-SHAFT CONNECTIONS ON MARINE ENGINE

DRAFTING-TABLE PROBLEM NO. 7.—COMPARISON OF RESULTS FROM OPEN AND CROSSED RODS

Comparison of Theoretical Indicator Cards Obtained by Using Open and Crossed Eccentric Rods as Applied to Link Motions in Locomotive Practice

362. The comparison is to be made by causing both sets of rods to produce the same cards at ¾ cut-off and then to draw the cards that each will produce at ⅝ and ¼ cut-offs respectively.

363. With the valve and valve-gear data given, this problem is most readily solved by finding the virtual eccentric which would give the same motion to the valve as the link does for the specified cut-off. This may be done graphically * as follows:

To Find "Virtual" or Equivalent Eccentric Motion for any Setting of a Stephenson Link Motion

Lay off $O'\,P'$, Fig. 234, equal to the distance between the centers of the eccentric pins on the link, using any convenient scale. With O' and P' as centers, and with a radius equal to the length of the

* For complete graphical demonstration, see "Designing Valve-Gearing," by E. J. C. Welch, pp. 105 to 141.

Digitized by Google

eccentric rod, describe arcs intersecting at O and draw $O\,O'$ and $O\,P'$. Through O and D (the center of $O'\,P'$) draw $F\,O\,D$, the central line of motion of the valve gear.

With a radius $O\,A$ equal to the radius of the eccentric, draw the eccentric circle $A\,B\,L$ to any convenient scale. Describe the lap circle $O\,H$; lay off the full-gear lead $H\,K$; and draw $A\,K\,B$ perpendicular to $O\,D$, thus obtaining A and B, the positions of the eccentric centers for full gear.

$A\,O\,I$ = the angle of advance. $O\,A$ and $O\,B$ are the diameters for Zeuner circles for the link in full gear, for either open or crossed rods. With open rods, $O\,A$ will be the position of the eccentric radius for going forward (*i.e.*, running "under") and $O\,B$ for backing (*i.e.*,

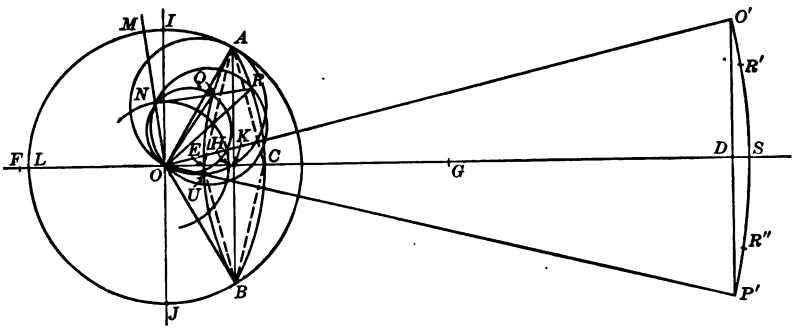

FIG. 234.—TO FIND "VIRTUAL" OR EQUIVALENT ECCENTRIC FOR LINK MOTION

running "over"), it being kept in mind that a reversing rocker is used and that the crank is at $O\,C$.

364. The travel of the valve and the events of the stroke are thus determined by the Zeuner circle $A\,K\,O$, for full gear. With the slide block at any other position, such as at R', the virtual eccentric may be found as follows for forward running:

Draw $A\,C$ perpendicular to $O\,O'$; this perpendicular, extended, cuts the central line of motion at C and gives $H\,C$ as the mid-gear lead. A circular arc drawn through the points $A\,C\,B$ corresponds closely with the curve containing the loci of the extremities of the diameters of the Zeuner circles (or the centers of the virtual eccentrics) for all intermediate positions. Therefore, the virtual eccentric for the slide block at R' has a radius $O\,R$, found by making $A\,R : A\,C\,B :: O'\,R' : O'\,S\,P'$, and the Zeuner circle $N\,R\,O$ determines all the events of the stroke, but not crank positions. They will only be determined if the Zeuner circles are in the proper quadrant.

If the position of the slide block is desired for a given cut-off as,

Digitized by Google

for example, with the crank at $O\,M$, R is found by drawing $N\,R$ perpendicular to $O\,M$ and tangent to the lap circle; and R' by the proportion just given.

If the link is actuated by crossed rods the slide block (represented at R' for open rods) would be at R'' ($R''\,P' = R'\,O'$) to give the same cut-off as before, and the Zeuner circle $N\,Q\,O$ would show the steam distribution. The arc $A\,E\,B$ is found by drawing $A\,U$ perpendicular to the mean eccentric position $O\,P'$ for crossed rods, and noting the point E where the perpendicular crosses the central line of motion.

365. The necessary data for this problem may be taken from the first eight items of the following table of dimensions of the valve gear of a locomotive:

Stroke of piston	24″
Maximum travel of valve	5½″
Steam lap	1¼″
Exhaust lap	0
Lead, full gear	$\frac{1}{16}$″
Length of connecting rod	92″
Length of eccentric rods	57½″
Distance apart of eccentric pins	12″
Distance of eccentric pins behind link arc	3″
Distance of tumbling shaft from main shaft	44″
Radius of tumbler	17″
Radius of hanger	13½″
Tumbling shaft above main shaft	12½″
Height of rock shaft above main shaft	8¾″

Mid-gear lead same on both strokes.

366. Enter a table of results on the plate as follows:

	Per Cent of Completed Stroke				Lead
	Admission	Cut-off	Release	Compression	
⅝ cut-off open rods					
⅝ " crossed rods					
¼ " open rods					
¼ " crossed rods					

Note: Take initial boiler pressure of 85 lbs. gauge with 2 lbs. back pressure and a 40 spring. Assume a clearance volume of 5 per cent. Make the indicator cards 4 inches long.

Digitized by Google

Gooch Gear

367. The link for this valve gear is a "stationary" one and is shown in Fig. 235. The characteristics of the gear are:

1st. That with the engine on dead center the slide block moves up and down, while the link remains stationary.

2d. That the link curvature is *convex* to the engine shaft, and has for its radius the length of the radius rod.

368. From the method of construction of this form of gear it will be observed that the slide block may be moved from one end of the link to the other without altering the position of the valve. This means that the *lead* opening (shown in the sketch of the valve section, Fig. 235) is constant for all positions of the slide block in

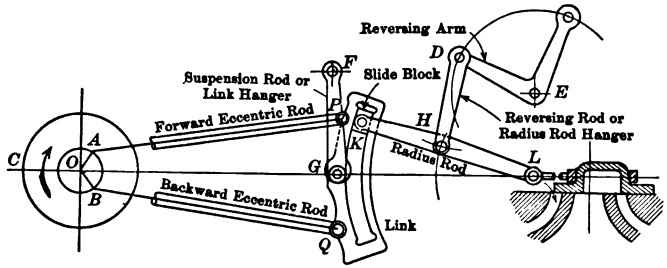

FIG. 235.—GOOCH GEAR

the link. With the Stephenson link the lead opening is dependent on the arrangement of the eccentric rods, but with the Gooch link the result remains the same whether open or crossed rods are used.

For stationary engines the Gooch gear is especially adapted for use in connection with a governor, for the reason that the radius rod throws a much less and more easily balanced load on the governor than does the shifting link with its rods, hanger, additional friction, etc. The Gooch gear takes much more space than the Stephenson gear on account of the radius rod. Its simple construction and obvious constant lead caused it to be much used in the early days of valve gears, but it is now rarely if ever used. It remains, however, one of the simple object lessons in reversing gears.

Allen Gear

369. The special features of this form of gear are the straight-line link *G N*, and the simultaneous operations of the link and the radius

Digitized by Google

rod $K L$ through the supporting rods $F G$ and $D H$ pivoted to the rocker $D E F$, Fig. 236.

The main object in laying out a design using the Allen link is to proportion the lengths of these reversing arms so that, as the link

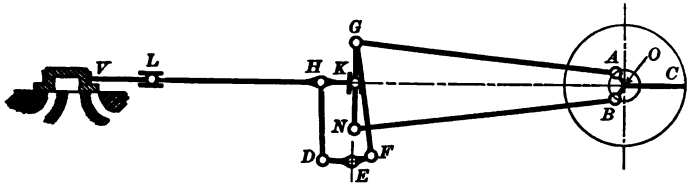

FIG. 236.—ALLEN GEAR

moves up and the radius rod down, the point K will move in as nearly an arc about L as possible. If it moved in a circular arc the valve would have a constant lead opening for all cut-offs, as in the Gooch motion. The Allen link gives less variable lead than the Stephenson, and with long eccentric and radius rods the lead is practically constant. Properly designed reversing arms tend, incidentally, to equalize the moments on the two sides of the reversing shaft E. The sketch of the valve gear in Fig. 236 reproduces to fairly accurate scale proportions that are in use on the London and Northwestern Railway.

Further information concerning this gear may be found in "Link and Valve Motions," by Auchincloss, pages 140 to 142.

FINK GEAR

370. Fig. 237 shows a center-line diagram of the Fink gear. The point O is the engine shaft, $O A$ the eccentric arm, and $O B$ the crank in line with $O A$. The eccentric rod $A D$ is rigidly connected at D

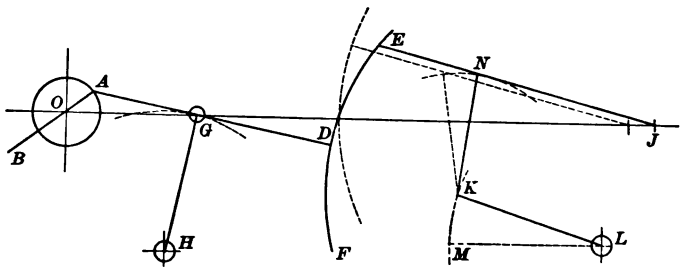

FIG. 237.—FINK GEAR

to the link arc $E F$. The radius rod $E J$ connects at J with the valve stem. The arc $E F$ is drawn with $E J$ as a radius so as to maintain

Digitized by Google

a constant lead at all gears. The point G in the eccentric rod is designed to move in an arc coinciding as nearly as possible with the line $O\,J$ by being pivoted to the radial arm $G\,H$ as shown. This mechanism causes the link arc to move up and down and thus give motion to the slide block E, which moves back and forth, and across the upper half of the arc each cycle when running full gear forward, and across the lower half when running full gear backward. The travel of E, and consequently the travel and cut-off of the valve, is regulated by the supporting rod $K\,N$, operated by the arm $K\,L$. A mathematical discussion of this motion may be found on pages 87 to 94 in "Valve Gears," by Spangler.

Porter-Allen Gear

371. This gear is a modification of the Fink motion just described. It has been manufactured for many years at the Southwark Foundry in Philadelphia, and is in service in a large number of industrial plants throughout the country.

The eccentric radius is represented by the line $A\,B$ in Fig. 238, and the crank by the line $A\,R$, and both are set in the same direction.

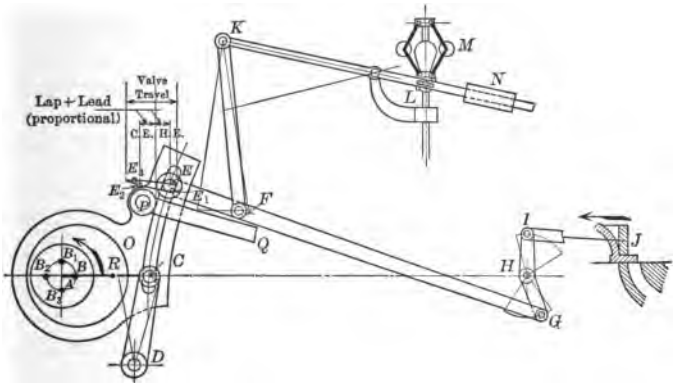

Fig. 238.—Porter-Allen Gear

The center of the eccentric sheave is at B and the circle B, B_1, B_2, B_3, is the path of the eccentric center. If, in the Fink gear, the point D is moved back to coincide with G, the principal feature of the Porter-Allen motion is obtained. The latter gear is usually made to give variable cut-off only and, therefore, the reversing arc (represented by $D\,F$ in the Fink motion) is omitted in Fig. 238. The Porter-Allen gear operates separate live-steam and exhaust valves, the latter

Digitized by Google

through the rod $P\,Q$, which it will be observed is not adjustable, and therefore gives constant release and compression for all cut-offs.

372. The path of the point E of the *eccentric-strap arm* is represented by the closed curve, E, E_1, E_2, E_3, while the path of the point E of the *rod* $E\,G$ is represented by a curved line not shown in the sketch, but which the student should be prepared to draw. Since these two paths do not coincide, there will be continuous slipping, or a quivering action, between the slide-block pin and the guide arc at E, such as is common to curved link motions generally. The arc $E\,C$ has G for its center and, therefore, constant lead is obtained at all cut-offs. The manner in which the governor controls the cut-off is shown in the sketch.

J. T. Marshall Gear

373. This form of gear, which employs a characteristic feature of the Fink and Porter-Allen gears in its use of a curved link with rigid arm $K\,L\,J\,H$ in Fig. 239, was designed in 1901 by Mr. J. T. Marshall

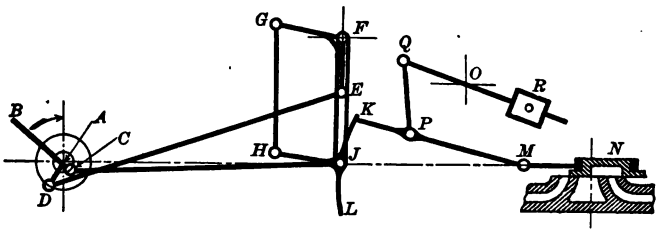

Fig. 239.—J. T. Marshall Gear

for locomotive use. It should not be confounded with the much older and widely used radial gear which is known as the Marshall gear and which is described later in this book. The present gear is designed specially to give quick cut-off and quick exhaust closure, thus minimizing wire-drawing of the steam and choking and back pressure in the exhaust. The claims for this gear may be analyzed and compared with any other gear by constructing the principal points of the gear and the valves in a number of other phases, thus noting the relative positions of the valve in its consecutive positions. In this J. T. Marshall gear there are two eccentrics of different radii, one 180° behind the crank as represented at $A\ C$, Fig. 239, and the other about 90° behind the crank as shown at $A\ D$. The latter connects by the link $D\,E$ to the bell-crank $E\,F\,G$, which turns on a fixed pivot at F. The pivot F also supports a swinging arm

Digitized by Google

which carries the curved link $K\,L$ by the trunnion at J. The bell-crank arm $F\,G$ supports the link $G\,H$, which gives a rocking motion to the curved link $K\,L$ about the swinging pin J. The arm $H\,J$ is rigidly attached to the link $K\,L$.

374. In the position shown in Fig. 239 the radius rod is raised to full position forward, and the valve shows full port opening, although the crank $A\,B$ has not yet moved 45°. As the crank continues to turn, it may be observed that the eccentric $A\,C$ will draw the link and the point K to the left, while the eccentric $A\,D$, through the intervening mechanism, will swing the point K to the right, thus nearly balancing the opposite tendencies to move the valve and allowing it to remain nearly stationary. This not only helps to maintain a full port opening, but decreases the problems of valve balancing and of wear. The eccentric $A\,C$ controls the lap and lead of the valve, while the other eccentric $A\,D$ is designed to regulate the point of cut-off by changing the total travel of the valve.

Walschaert Gear

375. The mechanism composing the Walschaert valve gear is entirely different from any thus far considered. The resultant motion of the valve is due to two independent component motions, one produced by the eccentric C, the other by the crosshead D, as shown in Figs. 240 and 241.

376. A is the center of the engine shaft, and $A\,B$ the main crank. The eccentricity $A\,C$ is obtained by keying the eccentric crank $B\,C$ to the main crank pin B outside of the connecting rod $B\,D$. C is taken at 90° with B, and the angle of advance, therefore, is zero; this means, of course, that so far as the eccentric motion is concerned the valve could have neither lap nor lead and steam would be admitted for full stroke, as explained on page 4. The link $R\,S$, sometimes referred to as a reversing link, oscillates on a fixed shaft shown at K in Figs. 240 and 241. Any desired valve travel and cut-off for either forward or backward motion of the valve may be obtained by shifting the slide block J (attached to the radius rod) along the link $R\,S$, by means of the radius-rod hanger $U\,T$. When the slide block is below the link center the engine runs in one direction, and when it is above it runs in the opposite direction.

377. The arm $D\,E$, which is firmly fixed to the crosshead at one end, connects at the other by means of a connecting link with the "lap-and-lead" lever or "combining" lever $F\,G\,H$. This lever, known also as a "combination" lever, so combines the component

Digitized by Google

eccentric and crosshead motions that the latter makes up for the angular advance which was neglected in laying out the eccentric center C. The lever is so proportioned that if the piston moves from

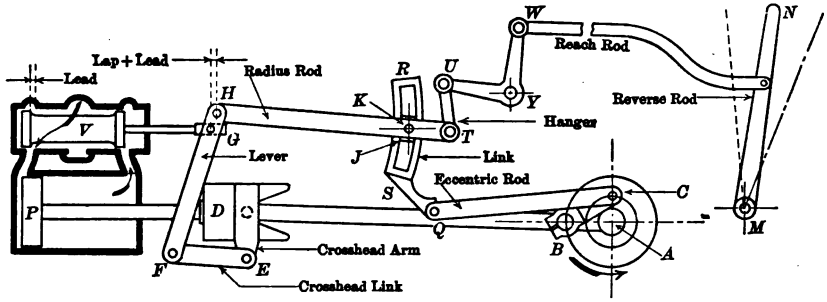

FIG. 240.—WALSCHAERT GEAR, INSIDE ADMISSION, SET AT MID-GEAR

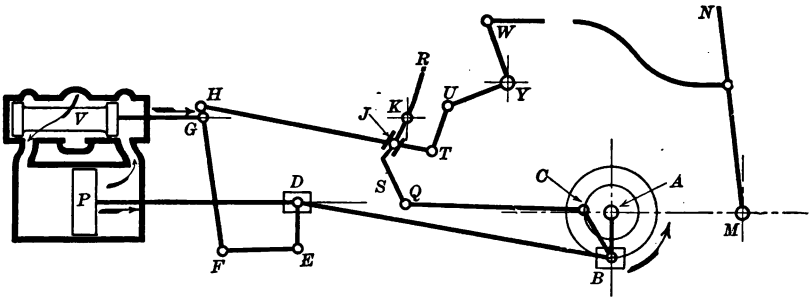

FIG. 241.—WALSCHAERT GEAR, INSIDE ADMISSION, SET FULL GEAR FORWARD

its central position to either end of the stroke while the radius-rod pivot remains stationary, that is, while J remains at K, the valve will be moved a distance equal to the lap plus lead in either case.

378. The Walschaert gear is used with both piston and flat valves and with the latter the positions of the valve-stem and radius-rod pivots on the combining lever are interchanged, thus reversing the direction of valve travel to accommodate the outside admission of the flat valve, see Fig. 242.

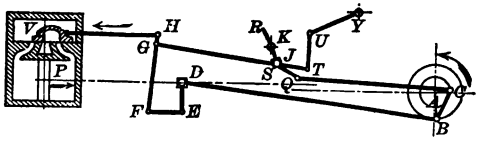

FIG. 242.—WALSCHAERT GEAR, OUTSIDE ADMISSION, SET FULL GEAR FORWARD

With outside admission, the eccentric crank always leads the

Digitized by Google

main crank, if the link slide-block is in the lower half of the link when running forward.

With inside admission the eccentric crank always follows the main crank if the link slide-block is in the lower half of the link when running forward, as shown in Fig. 241.

379. In laying out and adjusting the Walschaert gear it should be noted:

1st. That in order to get constant lead for all running positions, the link arc $R\,S$ must have a radius equal to the length of the radius rod $H\,J$ and that when the main crank is on either dead center the connections through the eccentric crank, eccentric rod, and link must be such that the link arc $R\,S$ has H of Fig. 240 as a center. Then, no matter where the link block J may be located, whether at the extremes for full gear (J, Fig. 241) or the center for mid-gear (J, Fig. 240), the lead will be the same, for J may be moved along the link, when in the position just described, without moving the valve.

2d. The lap-and-lead lever should be vertical when the piston is at the middle of the stroke and the radius rod in the mid-gear position; also its length should be chosen so that its angular vibration shall not exceed 45°.

3d. The rod $E\,F$ should be horizontal at the end of the stroke for external admission valves and horizontal at half stroke for internal admission valves, in order to correct for the error caused by the angularity of the connecting rod and to give symmetrical motion to the valve.

380. A general analysis of the Walschaert gear motion may be carried out by dividing the eccentric and crank circles into a number of equal parts, starting at C and B, Fig. 240, and finding, by construction, the corresponding positions of the lap-and-lead lever, as explained in connection with the link in the Stephenson motion. A full descriptive article by Lewis D. Freeman, in *The Railway Master Mechanic*, for June, 1914, gives the detail of the layout of a Walschaert gear and shows it applied to a Pacific locomotive having 24 by 28-inch cylinders.

381. The principal distinction between the Walschaert and Stephenson gears, so far as steam distribution is concerned, is that the former gives a constant lead at all cut-offs, whereas the Stephenson varies considerably. The Walschaert gear having been constructed, it is impossible to change the lead without seriously disturbing other events of the steam cycle, and this makes it a less flexible gear than the Stephenson. When, however, correct lead and steam distribu-

Digitized by Google

tion is obtained, it is likely to be better maintained in the Walschaert gear.

382. A modification of the Walschaert gear has been patented and used, in which the attachment to the crosshead is omitted and its place taken by a curved rod, concave upward, which is rigidly fastened to the main connecting rod a short distance from the crosshead. This curved rod, at its outer end, is pinned directly to the lap-and-lead lever at *F*, thus doing away with one joint. Such change in valve motion as would follow this form of construction may be determined by plotting the new mechanism in its several phases, as illustrated in the drawing of the Baker gear, Fig. 248.

383. With the Walschaert gear, just described, and the Hackworth and Marshall gears about to be taken up, it will be noticed that variable travel of the valve, with consequent variable cut-off, and also forward and backward running, are obtained with the use of only one eccentric or its equivalent. The final motion given to the valve stem in each case is the resultant motion of that due to the eccentric, and to some other mechanical feature, which latter distinguishes the name of the gear. In addition to the gears just mentioned there are other types too numerous to describe here. All of this style are frequently grouped under the head of radial valve-gears, the characteristic feature being that the resultant motion of the valve is taken from a vibrating link. In the case of the Joy gear soon to be described, there is not even one eccentric, but nevertheless the vibrating link is obtained.

384. The general advantages of radial valve gears are: Lightness, compactness, small number of moving parts, and constant lead. The general disadvantages are: Unequal valve motion, unless vibrating lever is long (Hackworth gear excepted), large transverse stress on vibrating link in case of an unbalanced valve, or of high speed.

Hackworth Gear

385. The Hackworth gear for producing variable cut-off and reversal of engine direction was patented in 1859 by John W. Hackworth, and it was the first of the radial type.

386. In Fig. 243, *O A* is the engine crank, and *O B* the eccentric which, in this gear, is always set either with the crank, or 180° from it. *B D* is the vibrating link and is of constant length; *H F*, a slide bar pivoted at the point *G*; *K L*, the valve stem, and *K C*, the valve-stem connecting-rod. *CMN* is the path of the point *C*. The

Digitized by Google

fixed point D on the vibrating link travels forward and back on the slide bar once during each revolution.

By adjusting the inclination of the slide bar, the resultant vertical motion of the valve is modified, and the point or cut-off varied. When the slide bar is horizontal the valve motion is a minimum; when its inclination is reversed, as shown at H_4 F_4, the engine is reversed. O P is the outward dead-center position of the crank.

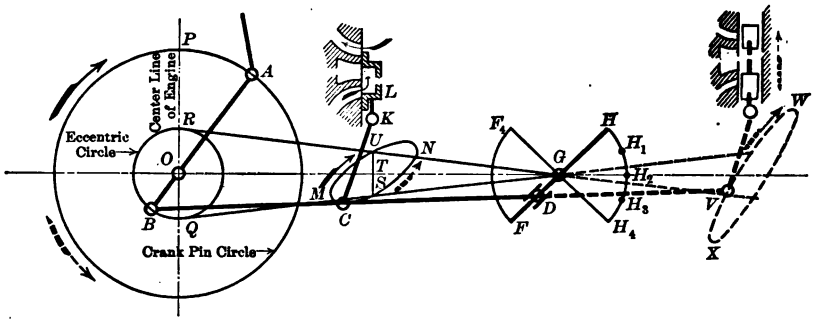

FIG. 243.—HACKWORTH GEAR

When the crank is on dead center the vibrating link is at Q G or R G, and the valve is off center a distance S T or T U. These distances are the same, and are equal to the lap plus the lead. Therefore, if the lap is the same on both ends of the valve, the lead is the same and is constant for all running positions, and is independent of the inclination of H F.

387. According to the requirements of the design the eccentric, which must be in line with the crank, may be either on the opposite side or on the same side; and the valve motion may be taken from the vibrating link on either side of the slide bar, at C or at V. These selections depend chiefly upon whether the valve admits steam from the inside or outside.

388. In Fig. 243 it is shown by the heavy solid lines that for an angle of 180° between crank and eccentric and for motion taken from the vibrating link between the eccentric and the slide bar, that there must be outside admission and that the crank must turn clockwise. Although the reason for this will be explained in Paragraph 392, in connection with the Marshall valve gear, the student should at this time be prepared to explain it without any further reference or suggestion. Also, in Fig. 243, the dash lines show that for 180° between crank and eccentric and for motion taken from vibrating link at a point beyond the slide bar, that inside ad-

Digitized by Google

mission must be used, and that the engine must turn counter-clockwise.

389. This valve gear gives a good steam distribution, and is compact. The objection to it lies in the excessive friction between the slide bar and slide block. The slide block in some designs is provided with rollers.

Marshall Gear

390. This gear, shown in Fig. 244, is largely used. It is a modification of the Hackworth gear in which the straight-moving slide block is replaced by a swinging pin moving in a circular arc. $O\,A$ represents the crank, $O\,B$ the eccentric, $B\,D$ the vibrating link,

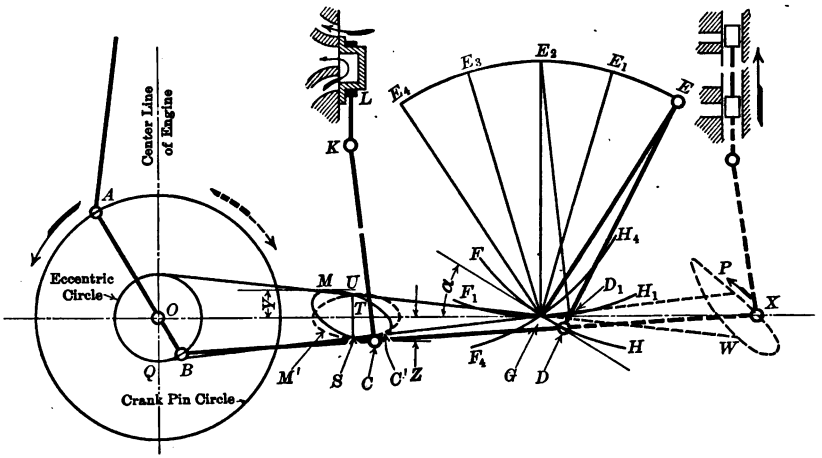

Fig. 244.—Marshall Gear

$K\,C$ the valve stem connecting rod, and $L\,K$ the valve stem. The point D of the vibrating link swings in the circular arc $F\,H$ about E as a center. The pivot E is at the end of the arm $G\,E$, which is keyed to a reversing shaft at G. The position of the arm $G\,E$ is shown by a heavy line for full gear forward. This position of the arm gives the maximum travel to the point C, from which the valve motion is taken. This travel is represented by the curve $C\,M$.

When the arm $G\,E$ is perpendicular to $O\,G$, the motion of D is approximately on the line $O\,G$, and the motion of C is a minimum, as represented by the dotted closed curve $C'\,M'$. To reverse the engine for full speed backward the arm $G\,E$ is thrown to $G\,E_4$.

With the pivot at E the cut-off is maximum; at E_1 it is earlier,

Digitized by Google

and at E_2 it is minimum and the port opening is equal to the lead.

391. In the Marshall gear the eccentric is always in line with the crank, either on the same or opposite sides of the shaft, as in the Hackworth gear. The constant quantity, lap plus lead, for all cut-off positions is shown at $S\ T$ and $T\ U$ in Fig. 244. Also the valve motion may be taken from X as well as from C, should the design require it. In the Marshall gear the valve travel on the head and crank ends is not symmetrical, as may be seen by the different lengths Y and Z of the maximum ordinates of the curve $C\ M$ on the opposite sides of $O\ G$, due to the point D moving in an arc of a circle. Should this irregularity affect the design to any appreciable extent it may be remedied by introducing a bent rocker.

392. The results of taking the valve motion from points of the vibrating link on opposite sides of the slide block are shown in Fig. 244. When the angle between the crank and eccentric is 180° and the motion taken from the vibrating link at C there must be outside admission and the engine must turn counter-clockwise. The reasons for this become most apparent by considering the engine on head-end dead center. Then B is at Q, D is at G, C is at S, and the valve is below its central position the distance $T\ S$ which has already been shown to be equal to the lap plus lead. If the engine is to run at all, the lead must be increased to a larger port opening, and this can only be done, with the present assigned setting of the mechanism, if S moves further down toward C. When S does this, the valve moves down also and steam continues to be admitted past the upper edge of the valve and, therefore, an outside admission valve must be used. Also, when S moves to C, Q must move to B and the engine must turn counter-clockwise. Similar reasoning will show that when all conditions are the same except that motion is taken from X, that there must be inside admission, and that the engine will turn clockwise.

393. A diagram showing the practical working parts of the Marshall gear is given in Fig. 245. The arm $G\ E_4$ is integral with the worm-wheel arc V, which in turn is operated through the worm N and the handwheel J. In passing from full gear astern to full gear forward E_4 is moved to E. Some

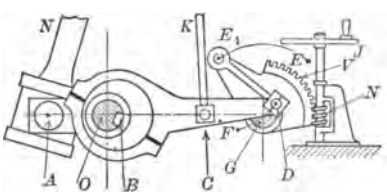

FIG. 245.—PRACTICAL APPLICATION OF MARSHALL VALVE GEAR

Digitized by Google

general proportions for the Marshall gear are given by Mr. Braemme, after whom this gear is sometimes called "Braemme-Marshall radial valve gear," as follows:

Length of supporting arm $G\,E$ and suspension rod $D\,E$ = 6 $\times O\,B$
Eccentric rod $B\,D$ (exaggerated in Fig. 244)..... = 6 $\times O\,B$
Angle a should not be more than 25°.

394. In connection with the Hackworth and Marshall gears the student will be required to assume the data given in the first two columns of accompanying table and to fill out columns 3 and 4 and draw a center-line sketch to illustrate the work.

1 Angle Between Crank and Eccentric.	2 Location of C	3 Kind of Valve Admission. Inside or Outside.	4 Direction of Rotation of Engine with D moving in the Path $H_4\,F_4$.
0°	Left of D		
0°	Right of D		
180°	Left of D		
180°	Right of D		

Joy Valve Gear

395. This gear, sometimes called a "compound radial gear," does away with the eccentric altogether, the valve motion being obtained solely from the connecting rod by a series of rods or arms.

$O\,A$, Figs. 246 or 247, represents the crank, $A\,B$ the connecting rod, $C\,E$ and $D\,K$ vibrating rods, $E\,F$ an arm of which the point E moves always in arc about F as a center. $I\,J$ in Fig. 246 is a slide bar or slot along which a slide block H moves each cycle, and it is pivoted at G so that it may be temporarily fixed in any position such as $I\,J$, according to the desired cut-off. In Fig. 247, $I\,J$ is the path of the pin H which swings about R, and R in turn is swung about G through the handwheel S and the worm and wheel W according to the desired cut-off. Both constructions give the same mechanical results. The ovals through C and D, Fig. 246, show the paths of these points, no matter what the cut-off gear. The oval through K shows the path of K for the position $I\,J$ of the guide arc. This oval varies for different cut-offs and is smallest, in the direction $K\,L$ of the valve travel, when the guide arc $I\,J$ is tangent to $E\,N$. With this setting of $I\,J$ the total one-half travel of the valve is equal to lap plus lead

Digitized by Google

and the mechanism is in mid gear. No matter what the position of $I\ J$, the point K will always be in the position K when the engine is on dead center and since $K\ N$ is lap plus lead, the lead is constant with the Joy gear at all cut-offs. The engine is reversed by swinging the guide arc $I\ J$ about G to the position $I_2\ J_2$.

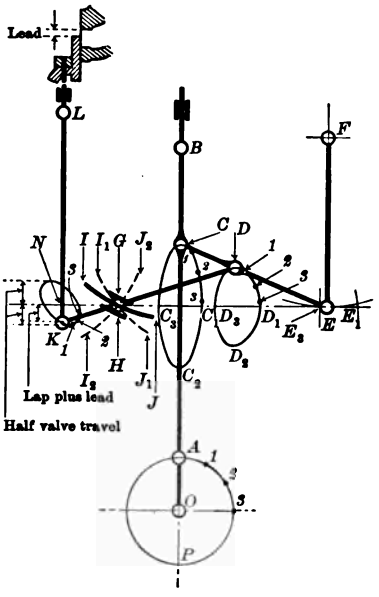

FIG. 246.—JOY GEAR

396. The line $E\ G$ should be perpendicular to $O\ B$ when the engine is on dead center, and it should pass midway between C and C_2 when the guide arc $I\ J$ is a straight line, and when approximately equal "half-travels" of the valve are desired at mid gear. With a curved path $I\ J$ and with equal half-travels desired at any particular cut-off one can adjust the position of $E\ G$ to one side of the mid-point of $C\ C_2$ so as to obtain desired results. The work here described should not be independently applied, but should be considered in conjunction with the following paragraph.

397. The location of the point D on the link $C\ E$ is chosen so as to give equal travel, as nearly as possible, of the point H on both sides of the pivot center G. If the point D of the lever $D\ K$ were attached directly to the connecting rod at C, the slide block H would move mostly on the part $G\ I$ of the guide arc $J\ I$. This may be readily seen by taking a divider or strip of paper and setting or marking off the distance $C\ H$ and then laying it off from C_1 and C_3. Taking the distance $D\ H$ and setting it off from D_1 and D_3 it will be seen that the slide block H moves approximately equal distances on both sides of G. This marked peculiarity of the mechanical movement, taken advantage of in the Joy gear, is further illustrated by the

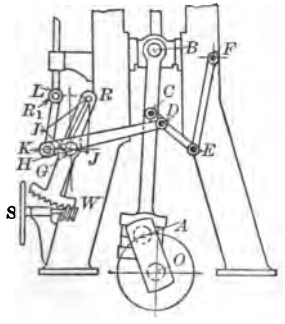

FIG. 247.—PRACTICAL APPLICATION OF JOY VALVE GEAR

Digitized by Google

fact that if the points C, D, and E were projected vertically on to the line $E\,G$ the projected points would all be different distances from C_1, D_1, and E_1 respectively; and also different distances from the points C_3, D_3, and E_3.

398. The paths of the points C, D, and K are obtained as follows: Divide the crank-pin circle into a number of equal parts, say twelve. Mark off on three separate straight edges of thin cardboard or paper the points $A\,C\,B$, $C\,D\,E$, and $D\,H\,K$ respectively. Using the first edge with A at regular intervals such as 1, 2, 3, etc., on the crank-pin circle and B always on $O\,B$, the points 1, 2, 3 on the curve $C\,C_1$ are found. Setting the point C of the second straight edge on the points 1, 2, and 3 just found, and keeping E on the arc $E_1\,E_3$, the points 1, 2, and 3 on the curve $D\,D_1$ are located. Again setting D of the third straight edge on the latter points, and keeping H on the arc $I\,J$, the points 1, 2, and 3 of the closed curve K are found. If one is experimenting to find the best closed curve K the actual drawing of the curve $D\,D_3$ may be omitted by using the second and third straight edges simultaneously; using the second as above described and keeping D of the third always at D of the second.

399. When properly proportioned the Joy gear gives a rapid motion to the valve when closing the ports, less compression at short cut-off than a Stephenson link motion, and a nearly equalized cut-off for all grades of the gear. It gives a constant lead. These points, favorable to the Joy gear, are counterbalanced in part by the number of parts and joints that are liable to give trouble with wear, and the obstruction it offers to proper care and attention.

400. It will be noticed that the Joy valve gear is practically the same in construction as the Hackworth and Marshall gears from the point D to L. The path of D in the Joy gear takes the place of the eccentric in the other two.

Baker Gear

401. This gear has been recently developed in connection with American locomotive construction. It not only does away with the eccentric but also with the curved link, and there is no sliding friction whatever in the gear. Illustrated in Fig. 248, it will be seen that the part of the mechanism lettered from A to F and from H to S contains the cross-head and return-crank drive characteristics of the Walschaert gear, while the parts $N\,L\,M\,K$ are suggestive of the Marshall gear.

402. The names of the gear parts are: Crosshead arm $A\,B$,

Digitized by Google

Fig. 248; union link *B D;* combination lever *D E F* (all one piece); bell crank *E T S* (the arm *E F* on the combination lever falls behind the arm *E T* of the bell crank for the phase shown in the illustration); gear connection lever *S K J* (one piece); radius bar *K L;* reverse yoke *M L N;* reach rod *P N;* reverse arm *O Q P;* reach rod *Q R;*

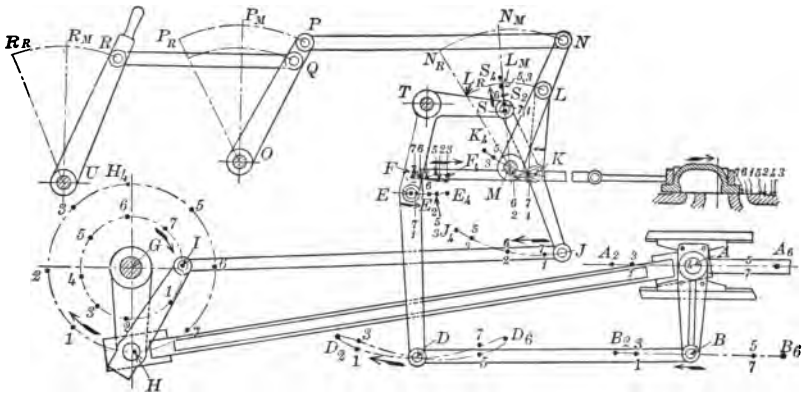

FIG. 248.—BAKER GEAR

reverse lever *R U;* crank *G H;* return crank *H I;* eccentric rod *I J;* connecting rod *H A.*

The mechanism is shown in position for full gear forward. In order to follow more closely the motion of the various parts during one cycle, the cycle has been marked at six phases and the paths and directions of the several points drawn. All fixed centers are indicated by vertical and horizontal center lines, and are cross-sectioned.

When running forward the reverse yoke *M N* remains stationary. To give earlier cut-off *M N* is thrown over toward $M N_M$; and to run backward it is thrown beyond N_M until full gear backward is reached at $M N_R$.

403. The pivot *I*, it will be noted, is fixed 90° behind the crank and therefore has zero angle of advance, and the motion from it alone would call for an elementary valve without lap, and would admit steam for full stroke. The motion from the crosshead gives the additional travel to the valve necessary to make up for lap and lead, and in this general respect the Baker and Walschaert gears are the same, although the actual valve motions at the succeeding phases of the travel are different in the two gears, thus permitting different claims to be made for the respective gears. These claims may be followed and analyzed from actual measurements of the gears,

Digitized by Google

or from working drawings, by following the paths of the various points in a manner similar to that shown in Fig. 248 when drawn to a greatly enlarged scale.

When the mechanism is set at mid gear, with $M\,N$ at $M\,N_M$, the arc of swing, $K\,K_4$, will have L_M for its center and S will remain practically stationary at S_2. With S_2 stationary, E will also remain at rest at E_2 and the return crank will give no motion to the valve. Under these conditions the only motion the valve has comes from the crosshead, the gear being so proportioned that the half valve travel is then equal to lap plus lead. As the reverse gear is thrown from the mid-gear position either forward or backward the port opening increases, but the lead remains constant, the gear thus giving results quite similar to those produced by the straight-slot eccentric with constant lead and variable preadmission.

404. The illustration shows an outside admission gear. If a valve with inside admission is used, the bell crank is placed ahead of the reverse yoke, and the point F below E. The return crank follows the main crank for both inside and outside admission.

Stevens Gear

405. The Stevens valve gear was invented by Mr. Francis B. Stevens, in the year 1839, and it is still extensively used on side-wheel excursion craft and on side-wheel ferryboats. It is illustrated in Fig. 249, and the names of the several parts of the engine and gear are as follows:

A and B, Double-seat poppet valves.
C, Live-steam rods.
D, Live-steam pipe.
E, Cylinder.
F, Throttle handle.
G, Upper valve toe.
H, Upper valve wiper cam.
I, Unhooking handle.
J, Lower valve toe.
K, Lower valve wiper cam.
L and L', Valve-stem lifters.
M, Starting bar.
M', Starting rock shaft.
N, Condenser.
O, Hand-wheel column.
O', Valve in water pipe.
P, Piston rod.
Q, Exhaust-steam rods.
R, Exhaust-steam pipe.
S and S', Rock shafts.
T, Exhaust eccentric pin.
T', Live-steam eccentric pin.
U, Floor line of engine room.
V, Braced connecting rod.
W, Walking beam.
X, Paddle-wheel shaft.
Y, Eccentric.
Z, Trussed eccentric rod.

406. In this gear, steam is admitted to the cylinder through a double-seat poppet valve. There are two double-seat valves at the top of the cylinder, one for the entering steam and one for the ex-

Digitized by Google

haust steam. There are also two similar valves at the bottom of the cylinder, usually below the floor line. An eccentric attached to the paddle-wheel shaft transmits its motion, through the trussed eccentric rod and the rock-shaft crank, to the rock shaft to which are rigidly attached cams, or wipers, as they are usually called. These wipers

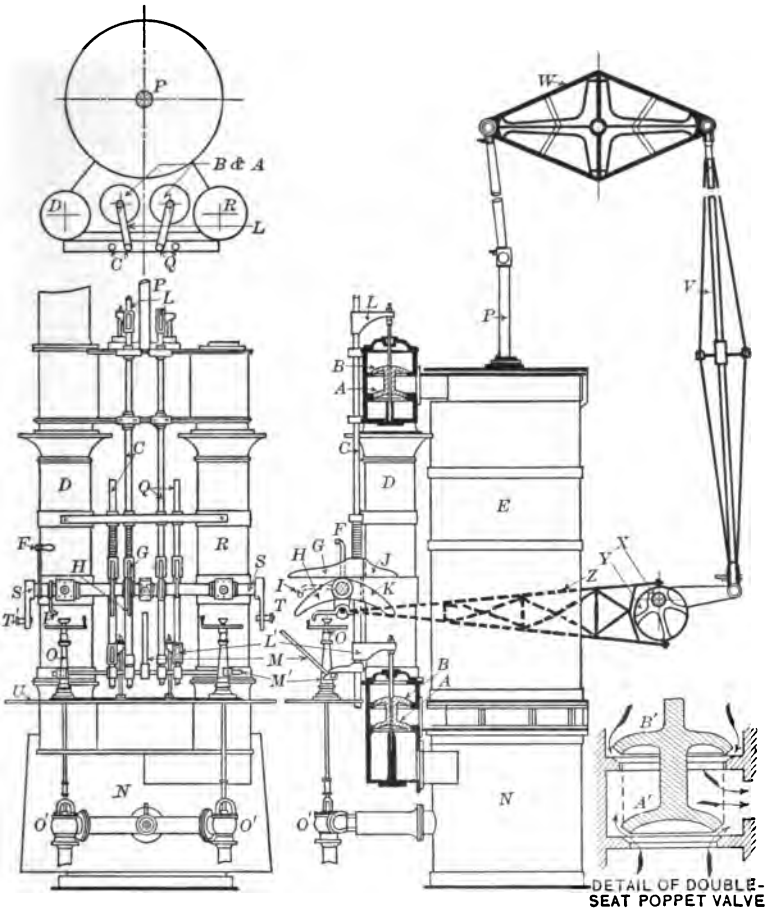

FIG. 249.—STEVENS GEAR

work against toes, which are rigidly attached to the steam and exhaust rods. These, through the valve lifter. raise and lower the double-seat valves.

407. On the large excursion steamers one eccentric only is generally used for the live steam and one for the exhaust. On ferryboats

Digitized by Google

there are two live-steam eccentrics, one for going forward and one for going backward, and also two eccentrics operating the exhaust. Where only one eccentric is used for live steam the valve must be operated by hand while the engine is backing.

In order to start an engine having this gear, it is necessary for the engineer to operate the valve through his own effort. This is accomplished through the starting bar or lever and the auxiliary, or starting rock shaft, to which are attached a duplicate set of wipers in miniature, operating on auxiliary toes on the steam rods. The effort required for this work is not excessive, as the double-seat valve is practically a balanced valve. A slight inequality of balance results from the fact that the disk A' must be smaller in diameter than the disk B' so as to pass through the valve seat at B' when the engine is being set up. In addition, weights are adjusted to the starting rock shaft to counterbalance the weight of the moving parts.

In practice, the weight of the valves, rods, lifters, etc., is sufficient to cause the valves to seat quickly and firmly enough to give a sharp cut-off. In order to aid the sharpness of the cut-off, however, some builders place springs on the live-steam rods.

408. In this gear the cut-off position remains constant, and variation of speed is attained by throttling. The engine is reversed by the engineer through the starting bar by means of which he can open the top or bottom steam valves and corresponding exhaust valves at pleasure.

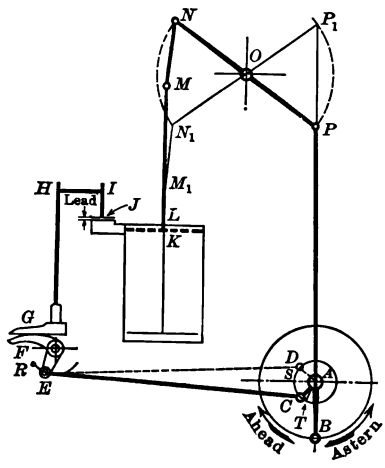

FIG. 250.—DIAGRAM OF STEVENS GEAR

In the front elevation, Fig. 249, the columns and hand wheels at O, O represent the connection leading to the valve in the water pipe supplying the jet condenser N.

409. The diagrammatic sketch, Fig. 250, may help in picking out from the detail of lines in Fig. 249 the essential kinematic action of the valve gear. The piston is indicated by the dash line at K at the top of the stroke. The paddle-wheel shaft is at A and the crank at $A\,B$. For running ahead, as shown by the arrow marked "ahead," the piston must start to move down, the valve J must be moving up and be up a distance equal to the lead

Digitized by Google

for the phase illustrated. In order that these motions may occur, using the toe and wiper cams, as shown at G and F, it will be evident that the eccentric center must be at C and the eccentric must precede the crank $A\ B$ by the angle $C\ A\ B$. When C has moved to S, E is at R, and the valve J is at its highest point. Assuming that the valve just opens when the eccentric is at T, the angle $T\ A\ C$ being the angle of lead, the total period of admission is represented by twice the angle $T\ A\ S$. For running astern, with the engine at the same phase as before, the eccentric would have to be at D and follow the crank by the angle $D\ A\ B$. The point D is directly above C.

Lentz Gear

410. The Lentz engine is of recent date and also makes use of the double-seat poppet valve, the steam regulation being accomplished, however, by varying the cut-off through a novel type of shaft-governor and straight-slot eccentric, instead of by throttling.

Detail views of this engine are shown in Figs. 251–4. The cylinder has four double-seat poppet valves, one at each corner. The live-steam valve for the crank end is shown in longitudinal section in Fig. 252. The steam chest is shown at S and the valve at V. The valve stem has no packing but is kept tight by the series of turned rings, called water rings, shown at T. Likewise the main stuffing box at U is kept tight by a series of iron rings accurately fitted, no packing being used.

411. A transverse section of the valve-actuating mechanism is shown in Fig. 251, the valve stem being actuated by an oscillating cam shown at P, acting on a roller attached to the valve stem. The cam curve is so designed as to disengage from the roller when the valve comes to a seat, but remains in contact until the valve is seated, thus preventing noise and permitting any engine speed. The cam surface is on an arm of a bell crank $P\ O\ N$, the other arm being actuated by the eccentric rod $B\ N$. The eccentric center is at B and the eccentric or lay shaft center at A. The eccentric shaft A runs longitudinally along the outside of the cylinder and gears with the main shaft through a special form of bevel gear. The slide block Y is permanently keyed to the eccentric shaft, and the total throw of the eccentric is twice $A\ B$ for the position shown. When the engine speeds up the governor throws the *small* slide block E, which works in a small transverse slot in the straight-slot eccentric sheave, thus moving the sheave itself along the block Y, and changing the total throw of the eccentric to a minimum of $A\ Z$.

Digitized by Google

412. The action of the governor itself is unique, and is illustrated in Figs. 253 and 254. A one-piece carrier having three arms, *A G*, *A F*, and *A D*, is keyed to the eccentric shaft. A heavy inertia ring *R*, mounted on a hollow shaft *M*, which turns freely on the eccentric

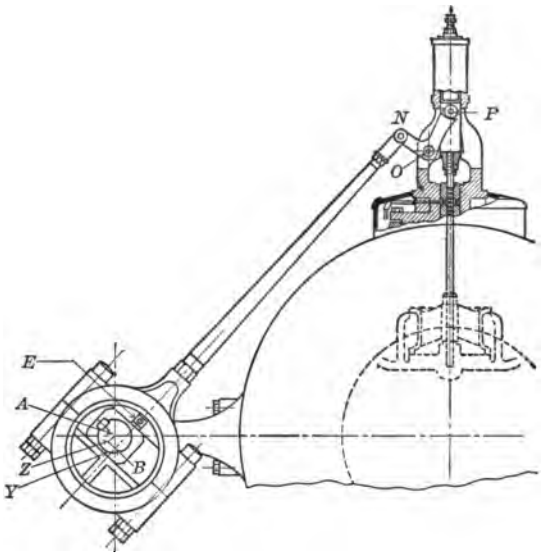

FIG. 251

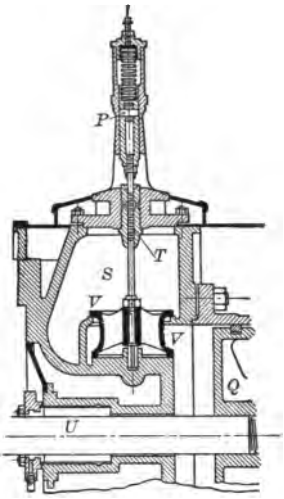

FIG. 252

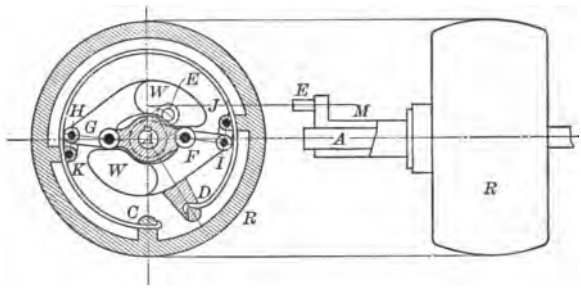

FIG. 253

FIG. 254

FIGS. 251–254.—LENTZ GEAR

shaft, gets its rotary motion through a flat circular spring *C D*. Attached to the hollow shaft *M* is an arm carrying the pin *E*. As the engine changes load and consequently speed, the inertia ring acts instantly, and the centrifugal weights follow as soon as the frictional

Digitized by Google

resistance of the moving parts is overcome, to move the pin E and the eccentric sheave along the block Y. The governor weights W, W, swing on pivots F, G, and, through the links $I\,J$ and $H\,K$, are directly connected to the inertia ring.

Sulzer Gear

413. The Sulzer valve gear for steam engines is widely known and is manufactured by Sulzer Brothers, at Winterthur, Switzerland. It is a poppet-valve engine, there being four valves in all, A, A, Fig. 255, steam valves, and Z, Z, exhaust valves, one at each corner of the cylinder. Each valve has four seats as shown at A, 1, 2, 3, and

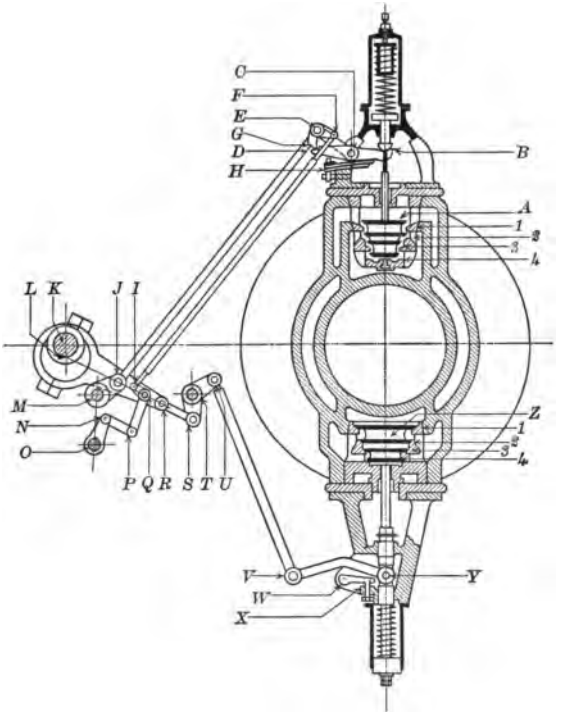

Fig. 255.—Sulzer Gear

4 and at Z, 1, 2, 3, and 4. The steam valve is shown open while the exhaust valve is closed.

414. The valve gear is a trip mechanism with a governor regulating the trip, which in turn controls the cut-off. In Fig. 255, B is

Digitized by Google

a valve spindle knob which receives motion from the lever *B C D* rigidly pivoted at *C*. *C E* is an arm swinging freely at *C* and supporting the bell-crank trigger or latch *F E G*, and also one end of the coupling rod *E J*. *K* is an auxiliary or lay shaft driven, through gear wheels, by the main shaft. *L* is the center of an eccentric sheave keyed to *K*, and *L R* is an eccentric rod. *J* is a pin on the eccentric rod carrying one end of the coupling rod *E J*, and it is also a supporting and guiding pin for the eccentric rod through the crank arm *J M*. Through the mechanism thus far described the steam valve *A* is raised or opened, and it is closed by the action of the spring at the top of the valve stem. A dashpot, or a leaf spring as shown at *H*, is used to lessen the effect of the blow as the valve seats.

415. The exhaust parts receive initial motion from *R* on the eccentric rod, through the link *R S*, bell-crank *S T U*, coupling rod *U V*, bent lever *V Y*, and valve stem from *Y* to the valve *Z*. At *W X* is a bar against which the bent lever acts when *V* has moved down a sufficient distance, at which time the point *Y* and the valve *Z* begin to rise. The bent lever and the fulcrum bar are so formed that the point of leverage moves to the left, giving lowest velocity as the valve starts to rise and as it seats. The fulcrum bar is adjustable about the axis *W* and is fixed in any desired position by the bolt *X*. The exhaust valve is held in place by a spring at the lower end of the valve stem and by the action of steam pressure while the bent lever is riding free from the fulcrum bar.

416. The governing mechanism starts at the shaft *O*, the governor weights causing this shaft to turn clockwise as the engine speeds up. Through the crank *O N*, connecting link *N P*, and bell-crank *P Q I* which is pivoted to the eccentric rod at *Q*, motion is conveyed to the coupling rod *I F* and to the bell-crank trigger or latch *F E G*.

417. At all engine speeds the arc of swing of the pin *E* is the same, and for the governor crank position *O N* as shown in the sketch, the latch edges *G* and *D* hold together for the greatest length of time and cut-off is late. For earlier cut-off *O N* is turned clockwise and *G* leaves *D* sooner. The design of this kind of valve gear would involve the establishing of the separating points of *G* and *D* which would be on an arc having *C D* for a radius for various cut-offs and then planning the intermediate gear parts accordingly.

Poppet-Valve Types

418. Poppet valves are so widely used in all forms of prime movers that the two principal double-seat types are specially illustrated in

Digitized by Google

Figs. 256 and 257, while a third type designed to overcome the ill effects due to warping, etc., is shown in Fig. 258.

Both the valves in the first two illustrations are shown open to the admission of steam and both are equivalent to double-ported valves of the sliding type. The disk or circumference B in each case is smaller than A in order to allow the valve to be placed in position when assembling the parts. This is the usual form of construction for double-seat poppet valves, although it gives a somewhat unbalanced valve due to the fact the greater area of A carries

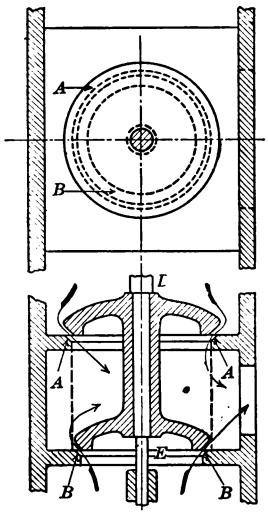

FIG. 256

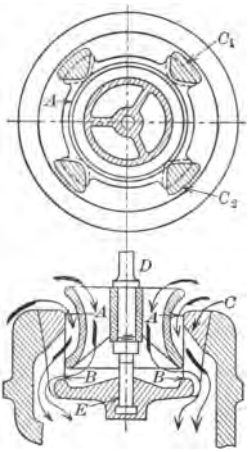

FIG. 257

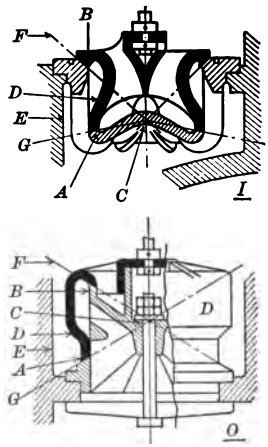

FIG. 258

FIGS. 256–258.—THREE FORMS OF POPPET-VALVE CONSTRUCTION

more steam pressure load than B and the effort necessary to lift the valve is determined by the difference between these two loads and the weight of the valve itself. The valve stem D and the guide stem E will affect the balance of the valve if they are not the same size.

By introducing some detail construction in the design of a double-seat poppet valve, both disks may be made the same size and the valve perfectly balanced. This is done in the Westinghouse steam turbine steam relay double-seat poppet valve, where the upper seating surfaces of both valve and valve cage are ground on separate rings which may be fastened in position and are removable. In Fig. 257 the valve seats are in an open cage C, the bottom seat of which is suspended by four hanger arms C_1, C_2, etc. The top section view is taken midway through the valve.

Digitized by Google

419. The disadvantages of double-seat poppet valves are, first, the difficulty of machining the valve and valve-cage seats so that both will fit accurately; second, the liability of the valve and valve cage expanding unequally, and, third, the tendency of the disks, or the valve seats, to warp when heated by the live steam. From the last two instances it may be noted that valves that are tight when cold may become leaky when put into service.

420. A valve designed to overcome the objections of the double-seat poppet valve is illustrated in two forms of construction at *O* and *I* in Fig. 258. A common structural detail prevails in all valves of this special type, namely, that the valve-seat surfaces, if extended, meet on a point on the valve center line. The valve seats are on lines at *F* and *G* and the common point on the valve center line is at *C*. The valve is shown by heavy lines at *D*. The principle involved in this form of double-seat poppet valve is most completely illustrated at *O*, Fig. 258, where it may be seen that the seating surfaces of both the valve and the valve container lie on opposite nappes of the *same* cone. The valve is designed on the assumption that if the seating surfaces are all on the same cone the longitudinal and radial expansions of the valve and the valve seat will be the same, and the valve will seat properly at all temperatures.

The illustration at *I*, Fig. 258, carries out the idea of the cone seats having a common vertex at *C*, but different cone angles are used, and these may make allowance for varying rates of expansion of the valve and valve seats due to varying thicknesses and arrangements of adjoining metal. In the common form of double-seat poppet valve, it will be noted from Figs. 256 and 257 that the valve seats lie on two distinct cones, and that the vertices of these cones do not meet. In all three figures, however, the vertices of the seating cones are in the center line of the valve which is essential for easy machining and for proper seating in case the valve should turn while it is lifted from the seat.

Floating or Self-Centering Valve Gears

421. In this type of gear, a valve with very small steam lap is moved off center by hand, thus starting an auxiliary engine, the moving parts of which automatically return the valve to its central position, thus shutting off steam and bringing the piston to rest at any desired position in its stroke, depending on the amount of motion given to the valve at the start. As illustrated in Fig. 259 it is used to operate the Stephenson link in a heavy marine engine. The diagrammatic sketch of Fig. 259 is shown in a general drawing in Fig.

Digitized by Google

260, where the self-centering gear and engine are shown attached to the framework of a large ferryboat engine. To follow the detail construction from the rock shaft *O* to the link, refer to Fig. 233, in which *O* is the rock shaft.

In addition to using these gears, as above described, for changing the cut-off, and for reversing in engines which are too large to be operated by hand, they are used in steam hammers. The same principle is applied, although the construction is different, in steering engines and certain types of elevator engines where it is desired that a self-centering engine shall turn a fraction of a revolution or a certain number of revolutions, and then automatically come to rest. This case is illustrated in Fig. 261. It is also applied to steam turbines, and to gas engines as will be explained later.

422. The method of operating the gear when it is desired to move the piston through only a part of its stroke is as follows: Suppose it is desired to move the Stephenson link, Fig. 259, from its mid gear

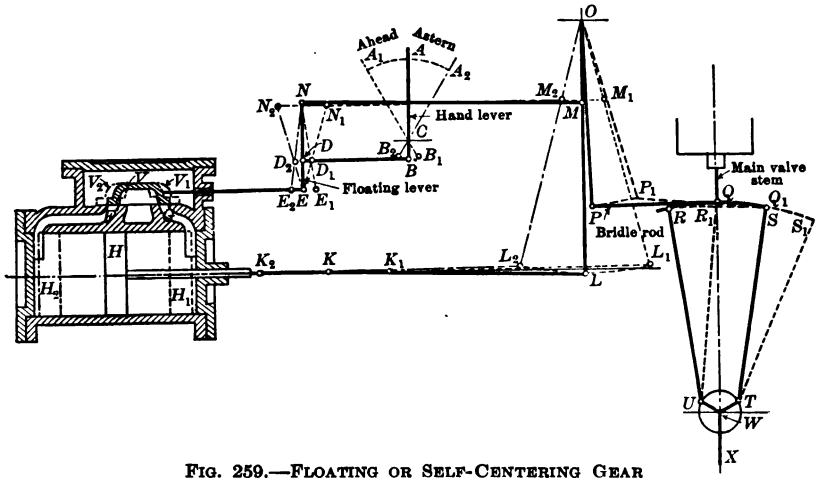

FIG. 259.—FLOATING OR SELF-CENTERING GEAR

or neutral position, $R\,S$, to its full speed forward position, $R_1\,S_1$. This would be accomplished by moving the hand lever $A\,C\,B$, thus giving practically simultaneous motions to all points in the mechanism, but in order to more sharply define the explanation it will be assumed that the action of the mechanism takes place in quick successive steps as follows:

1st. The engineer moves the lever from A to A_1, carrying B to B_1, D to D_1, E to E_1, and the valve from V to V_1, thus opening the port F to steam by the amount $E\,E_1$ less lap. $E\,E_1$ equals steam-

Digitized by Google

port width plus lap. The point N is assumed to remain stationary for the time being. As soon as the engineer brings the hand lever in the position $A_1 B_1$, he clamps it there, thus securing the end of the short connecting link $B D$ at D_1 to act an instant later as a temporarily fixed turning point for the "floating" lever $N E$.

2d. As soon as the port F is opened the piston moves to the right, driving the crosshead from K to K_1, the rock-shaft lever from $O L$ to $O L_1$ and thus securing the desired rotation of the rock shaft and with it the required motion of the link $R S$ through the arm $O P$ and the bridle rod $P Q$. The "return arm" $O P$ may or may not be in line with $O L$ according to the construction of the engine and framework.

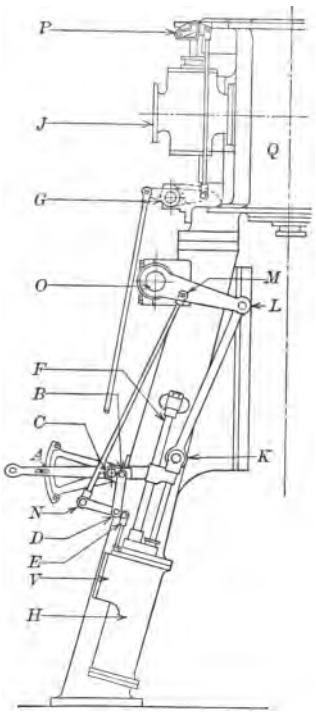

FIG. 260.—SELF-CENTERING GEAR APPLIED TO FERRYBOAT ENGINE

3d. The point M of the rod $M N$ is attached to the lever $O L$ and is carried by it to M_1, thus causing N to swing to N_1 about the temporary center D_1, and E_1 to swing back to E, again placing the valve on center and shutting off steam just as the piston reaches H_1.

Theoretically, there should be no steam lap on the valve, but this gives too sensitive an action. In practice a very small steam lap is used—about $\frac{1}{16}$ inch. The exhaust lap is added for cushioning and may be about $\frac{1}{8}$ inch.

423. If it is desired to move the Stephenson link back from full speed ahead to say half speed ahead, the engineer would move the hand lever to a point midway between A_1 and A and clamp it there. This would move D_1 halfway to D, E halfway to E_2, and cause the valve to open the port G halfway approximately. The piston would then be driven from H_1 toward H, and would come to rest when it had caused N_1, through the intervening mechanism, to reach a position midway between N_1 and N. The new positions of the pivot points N_1, D_1, and the point E would then all be in one straight line and both ports would be closed with the valve on center.

Should the expansion of the steam or the weight of the moving

Digitized by Google

parts carry the piston beyond the desired position, the valve would also be carried beyond its central position, thus admitting steam on the other side and quickly balancing and securing the piston at the desired point.

424. When the crosshead, or some other portion of the mechanism, is not locked at a given running speed, the weight of the piston, crosshead, connecting rod, etc., especially if these parts are in a vertical position, will cause the entire mechanism, including the Stephenson link, to move gradually until the valve is drawn to one side by the amount equal to its lap, when steam will enter the port and drive the piston and entire gear back to the desired position. In the meantime, the slight changing of position of the Stephenson link has been gradually changing the point of cut-off so that the speed of the engine has gradually increased or decreased to a certain point and then suddenly recovered. This action is technically referred to as "creeping," and its constant recurrence is noticeable in vessels carrying this form of unlocked gear.

Drafting-Table Problem No. 8.—Floating Valve Gear

425. Construct a floating or self-centering valve gear from the following data:

Cylinder: bore, 9 inches; stroke, 18 inches.
Steam ports, 8 inches x 1 inch; exhaust port, 8 inches x 1½ inches.
Valve throw for ½ stroke of piston = steam port width plus steam lap.
Steam lap, $\frac{1}{16}$ inch; exhaust lap, ⅛ inch.
Width of bridge, ¾ inch; width of piston, 2¾ inches.
Clearance, ½ inch; thickness cylinder wall, ⅝ inch; diameter piston rod, 1¾ inches.
Length of piston rod, from center of piston, 27 inches; connecting rod, 25 inches; valve stem, from center of valve, 16½ inches.
Total angle of action for rock shaft, 45 degrees; hand lever, 60 degrees.
Ratio of lever arms ($E\,D : D\,N$ of Fig. 259) 1 : 2.
Assume proportions for bridle rod, Stephenson link, eccentric rods, etc.

426. With the above dimensions, draw the engine cylinder and valve chest diagrammatically about as shown in Fig. 259.

Show the entire mechanism in skeleton construction on the central position, and also in the characteristic line work, as shown in Fig. 259, for full gear ahead and full gear astern positions.

Assume that the gear is all set and that the vessel is running full speed astern. Show by fine solid lines the center-line positions of each piece of mechanism after the engineer has changed to half speed ahead.

Digitized by Google

Label the eccentric rods properly with the words "ahead" and "astern." For running ahead the crank $W X$ is assumed to turn clockwise.

427. The pivot E is generally made to travel in a straight line coinciding with the valve stem. The points D and N travel in curvilinear paths. In practice, the floating lever does not swing through such wide angles as are shown in the drawing, for in the design, as stated at the outset, it is assumed that the action on the pivot points D and N takes place in successive steps, whereas in the actual mechanism these motions occur simultaneously. O, C, and W are the only fixed turning points.

The swinging arms should be laid out to have the same obliquity of action on each side of the center line, as for example, L should rise and fall equal amounts from the horizontal center line; likewise, $M N$ and $P Q$ should swing through approximately equal angles on both sides of their horizontal positions.

The ratio of $1 : 2$ for $E D : D N$ is an arbitrary value and may be different in different gears, depending on the proportions of the other parts.

Steering-Gear Engines

428. The principle of the self-centering valve gear is here used to obtain a certain rotation of a drum carrying the tiller rope, for a given swing of the pilot's wheel, or, in other words, a certain number of turns of the auxiliary steering engine for a given motion of the self-centering valve.

Forbes Steering Engine

429. The action just described is obtained in Figs. 261 and 262, which illustrate the Forbes Steering Engine, as follows: The two cylinders A and A', Fig. 262, drive the shaft B, Fig. 261, the power being transmitted through the worm C and wheel D, and the spur gears E and F to the drum carrying the rope to the rudder arm.

The admission of steam to cylinders A and A' is controlled in the usual way by the hollow piston valves G and H respectively. The floating or self-centering valve L is a third piston valve which serves simply to direct the live steam from the feed pipe into the passage J or K, thus establishing inside or outside admission for A and A', and therefore determining the direction that B will have.

430. Before taking up the action of the mechanism as a whole, attention is called to the fact that M is a worm wheel mounted on a threaded rod R, and is prevented from having longitudinal motion

Digitized by Google

along the rod by contact with the frame shown at N and O. R is connected to the valve stem P by a swivel joint Q, and to the rod S (connected with the pilot wheel) by a square-section slip joint, as shown in view T, allowing relative motion in a longitudinal direction only.

Assume that a certain motion of the pilot wheel results in the turning of S, and therefore R, in the direction shown by arrow I;

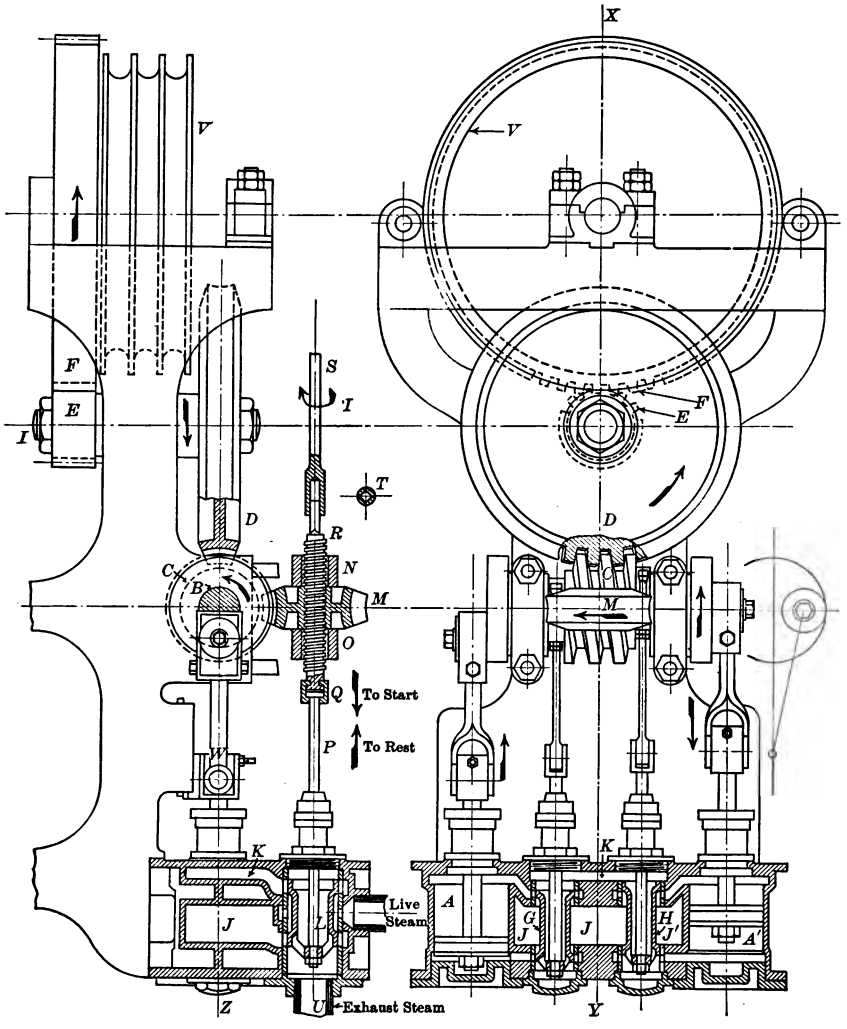

FIG. 261 FIG. 262

FIGS. 261 AND 262.—FORBES STEERING ENGINE

Digitized by Google

worm M will remain stationary, and the thread in the hub will cause R and L to move down, allowing live steam to fill the passage J, and giving inside admission to cylinders A and A', A' being the starting cylinder in the phase here represented. Since the two cranks turning the shaft B are set 90° apart, the engine will always be in a position to start in the desired direction. B, D, and F will have directions shown by arrows. The exhaust steam from A and A' will go from the cylinders into the passage K, and will pass through the hollow center of L into the exhaust pipe U, it being remembered that the valve L was placed below its central position by the initial motion given by the pilot. As soon as the engine starts, the worm M begins to rotate as shown and by means of the thread in its hub draws the stem P and the "floating" valve L back to its central position and the engine stops automatically.

If the initial motion of S is reversed, the valve L is lifted, allowing the live steam to enter K, thus establishing outside admission for the cylinders A and A', and therefore reversing the motion of the other members, the engine coming to rest when the valve L is automatically dropped to central position.

Williamson Steering Engine

431. Another and a well-known type of steering engine is the "Williamson," illustrated in Figs. 263 and 264. Rotary motion from the pilot wheel is transmitted through the stem $A\,A$, Fig. 264, to the miter wheels B and C. The wheel C has an extended hub which is threaded internally, the exterior of the hub being turned with two collars which fit against the sides of the fixed bearing D and prevent longitudinal or endwise motion of the wheel C as it turns on the threaded shaft $E\,X$. It will be evident, then, by following the directional arrows, that as the pilot wheel is turned clockwise, the shaft $E\,X$ will be moved to the left, and that the self-centering, or reverse, or "change" valve L, as it is variously known, will be moved to the left through the swinging arm $I\,G\,J$, the link $J\,K$, and the valve stem $K\,L$.

432. Referring now to the plan view in Fig. 263, the live steam passes from the steam chest M around the outside of the "reverse" valve L which is shown in its extreme left-hand position, through the ports and passageway M_1 to the main piston at M_3. Exhaust steam passes out as indicated by the dash-line arrows, through the ports and passageway O, O_1, etc., to the exhaust pipe at O_4. The reverse valve L has now admitted live steam to the ends and the center

Digitized by Google

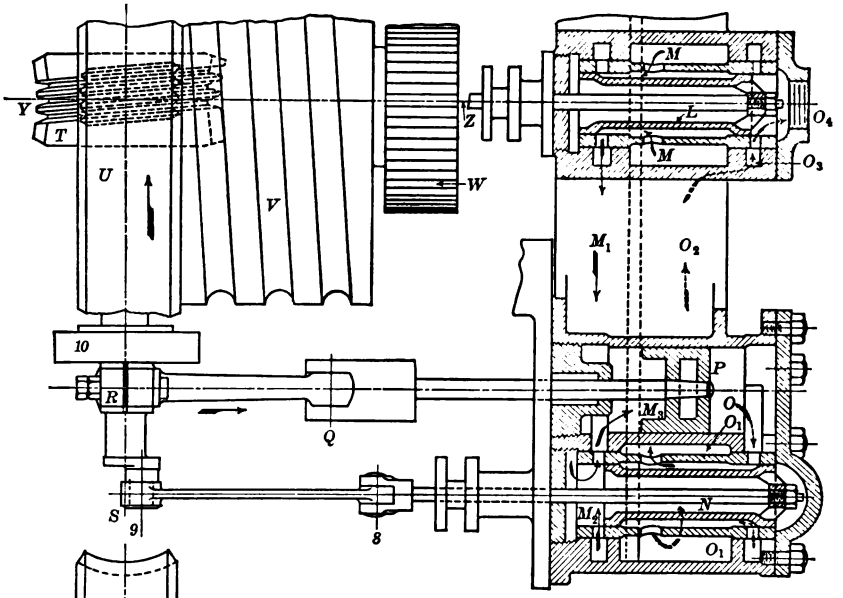

FIG. 263

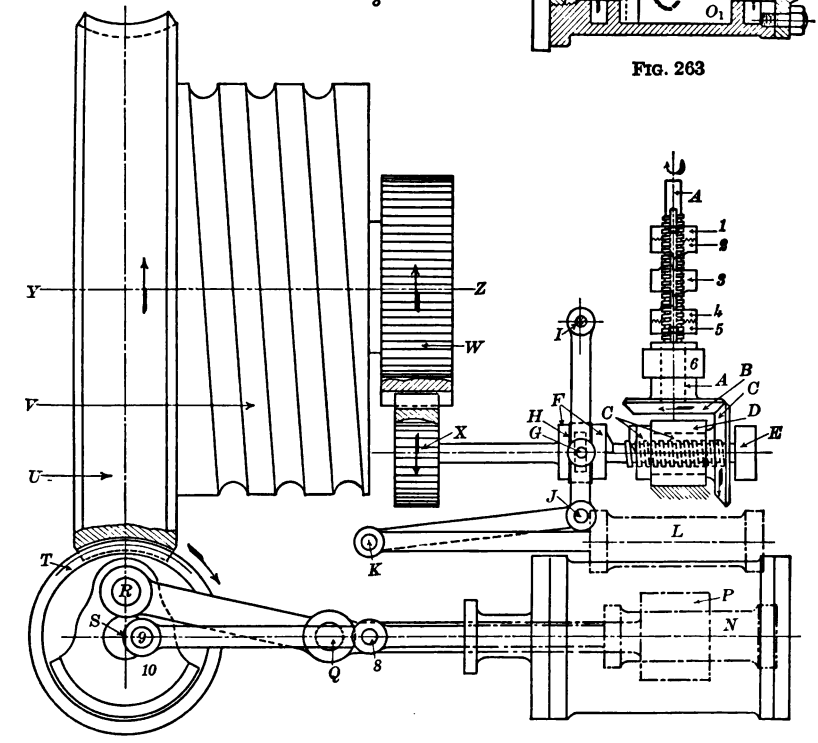

FIG. 264

FIGS. 263 AND 264.—WILLIAMSON STEERING ENGINE

Digitized by Google

of the hollow main piston valve N, and the simple steam engine as outlined by the eccentric rod *8*, *9*, the eccentric radius *9 S*, the shaft S, the main crank $S\,R$, and the connecting rod $R\,Q$, will continue to run until the reverse piston L approaches its central position and shuts off the steam supply. As the engine continues to run, it turns the worm T, which is keyed to the shaft S, and this rotates the worm wheel U, which is rigidly mounted, together with the tiller-rope drum V and the spur gear W, on an auxiliary shaft whose center line is $Y\,Z$. The directions of rotation of the several parts just mentioned are indicated by arrows. The wheels W and X are known as "follow-up" gears, and as X rotates it turns the shaft $X\,E$ in the threaded hub of the miter wheel C, which is now temporarily at rest and is acting as a fixed nut. This causes the spur wheel X and shaft, and also the reverse valve L, to move to the right and to shut off the steam supply to the engine valve N.

433. In the total operation described above in detail it will be observed, in summing up,

1st. That the number of turns of the engine, the tiller-rope drum, and the shaft $X\,E$ are all proportional to the rotation given to the pilot wheel and the pilot-wheel stem A;

2d. That for every movement of the pilot wheel, when moved sufficiently to overcome the very small steam lap of the reverse valve L, the valve L is moved, always starting from its central position, in one direction, and that it is automatically returned to its central position after the engine has made a few turns, and finally,

3d. That the tiller-rope drum V can be rotated a fraction of a turn or as many turns as desired and then held stationary, thus maintaining the rudder in any position until the pilot-wheel is again operated.

434. When it is desired to run the steering engine in an opposite direction from that indicated by the arrows, the self-centering valve is moved from its central position to the right and the ports and passageway marked $O_3\,O_2\,O_1$, and described in paragraph 432 as exhaust channels, now become live-steam channels, and the ports and passageway marked M_2, M_1 and the hollow center of the reverse valve become the exhaust channels, the opening at O_4 remaining the exhaust outlet as before. With this reverse motion of the mechanism the arrows showing the direction of flow of the steam and the directions of motions of the mechanical parts would also be reversed.

435. The drawings in Figs. 263 and 264 are more or less diagrammatic, many of the details of construction which are not necessary to an understanding of the action of the gear having been omitted. In

Digitized by Google

addition to the principal mechanical parts described in previous paragraphs, another group of parts is shown in the drawings. These parts limit the action of the gear, and provide automatic stops when the rudder is "hard over." The parts and the method of adjusting them are as follows: The center nut *3* has a tongue or projection, not shown, which slides in a vertical groove in the framework and prevents it from turning. The smooth-bore serrated collar *1* is loosened by turning the small square-head set screw and backed off; also the threaded serrated collar *2* is screwed back. The stem *A* is then turned until the rudder is "hard over," when the center nut *3* has traveled up the threaded part of the stem. The threaded collar *2* is then screwed down against *3* until the lugs on the two parts engage. The smooth-bore collar is then moved down until the serrated surfaces engage, and fastened in place by the set screw. The same adjustment is made with the collars *4* and *5* for the opposite "hard-over" point.

The endwise travel of the shaft *E X* is also limited in its left-hand travel by the shaft head *E*, and in its right-hand travel by the lugs on the parts *F* and *C*.

The Uniflow Steam Engine

436. The uniflow steam engine differs fundamentally in both its mechanical and thermal operations from the ordinary steam engines that have been thus far considered. In the ordinary engine the steam flows forward from the end of the cylinder on the expansion or power stroke and it flows back toward the end of the cylinder on the exhaust stroke and is discharged at the same end at which it entered. For purposes of comparison, then, the ordinary reciprocating steam engine may be termed a counterflow engine. In the original uniflow engine the steam is exhausted only through specially constructed exhaust ports at the end of the expansion stroke, and so continues its course through the engine by flowing in one continuous forward direction. This action carries with it important thermal principles which permit the uniflow engine to operate more economically than the ordinary reciprocating engines, under some conditions. Fewer operating valves are required on the uniflow engine and the valve gear is simpler than the gear on the ordinary steam engine.

The idea of admitting steam to an engine at the ends and exhausting through central ports controlled by the piston was patented in the United States by Bowen Eaton in 1857, patent No. 17,142. Mr. J. L. Todd, of England, secured in 1886 a patent on

Digitized by Google

an engine embodying the same general method of steam control, but neither carried the idea through to a commercial success. John Davidson, of Manchester, England, claims to have built the uniflow engine commercially prior to 1909, when Professor Johann Stumpf, of the Technische Hochschule, Charlottenburg, Germany, developed and built the engine with its present high degree of economy, and set forth the principles of its practical operation in the *Zeitschrift des Vereines Deutscher Ingenieure*, November 5, 1910. Since 1909 a great many engines of all sizes have been built in Europe, the largest developing 6,000 horse-power. The uniflow engine was first built in this country for test purposes and for general use in 1911 by the Nordberg Manufacturing Co. The Skinner Engine Co. placed a modified uniflow engine on the market in 1912 and the Ames Iron Works built the first engine in this country under Professor Stumpf's patents in 1914.

The Ames-Stumpf "Una-Flow" Engine

437. The cylinder and valves of the Stumpf uniflow engine as manufactured in this country by the Ames Iron Works at Oswego, N. Y., is shown in longitudinal and cross-sections in Fig. 265. Its

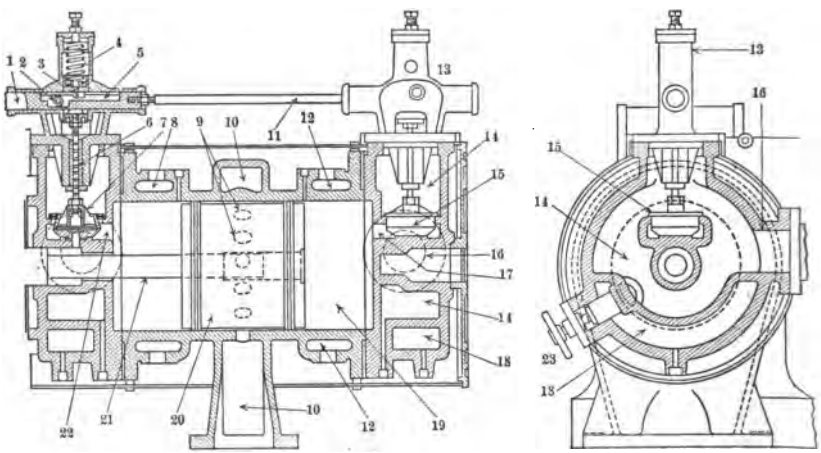

Fig. 265.—Ames-Stumpf "Una-Flow" Engine

method of operation is as follows: Starting with the head end of the cylinder, steam is admitted from the steam chest *14* by the double-seat poppet valve *15* through the short port *17* to the cylinder *19*. The piston is driven to the crank end of the cylinder. When it has

Digitized by Google

traveled to near the end of the stroke, say nine-tenths of the way, the head end of the piston begins to uncover the openings shown in the cylinder wall at *9*, through which steam exhausts during the last tenth of the forward stroke and the first tenth of the return stroke. During the remaining nine-tenths of the return stroke the steam that is trapped in the cylinder is compressed, the compression being regulated, as will be explained later, so as not to exceed the live-steam pressure. When the piston reaches the head end of the cylinder live steam is again admitted by the poppet valve *15* and the cycle repeated. The same action goes on in the crank end, thus making the uniflow engine double acting, the same as the ordinary engine. Those familiar with the double-acting two-cycle gas engine, which is described in Volume II of this work, will recognize the similarity of construction in the two engines. In order that the uniflow engine may be double-acting, it will be readily seen that the exhaust openings at *9* must be at the center of the cylinder and that the length of the piston must be equal to the stroke of the engine less the width of the ports at *9*. It will be further noted that only one valve is used at one end of the cylinder at *15* and that the piston itself acts as the exhaust valve in opening and closing the exhaust ports.

438. The speed of the engine is regulated by a flywheel governor and swinging eccentric which changes the point of cut-off. The circular bar *1*, Fig. 266, connects indirectly with the eccentric rod. The bar *1* carries a roller *2*, which comes in contact with the cam *3*, which is attached to the valve-stem head *24*. Thus the double-seat poppet admission valve *7* is raised against the pressure of the spring *4* at the proper time and it is pushed down by the same spring at the desired cut-off point. The cam is formed to give an easy motion to the poppet valve just as it rises from and approaches the valve seat, but during the remainder of its rise and fall it has a quick action so as to secure sharp admission and cut-off on the steam control. A section of the roller-carrying bar at *5* is shown at *A*, and a section at the roller *2* at *B*, Fig. 266.

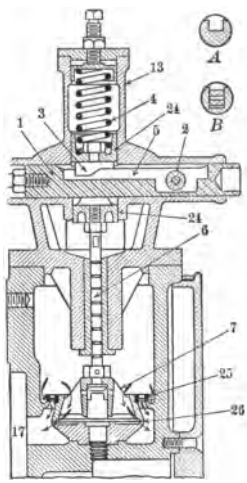

FIG. 266.—ADMISSION VALVE AND GEAR, AMES - STUMPF "UNA-FLOW" ENGINE

Should the engine speed increase, the governor reduces the

Digitized by Google

throw of the eccentric, and the travel of the bar *1* is reduced so that the roller *2* is in contact with the cam *3* for a shorter period and cut-off occurs earlier.

439. A feature of the construction of the double-seat admission valve *7* is the flexible steel lip shown at the upper seat *25*, and which is attached to the cast-iron body of the valve. The high temperature involved in the uniflow engine distorts the ordinary or rigid double-seat poppet valve to such an extent that it is impossible to keep both of the seating surfaces of the valve seat true so as to prevent leakage. The flexible steel lip is designed to spring sufficiently under the live-steam pressure to accommodate itself to any distortion of the valve or valve-casing seat. Leakage past the valve stem *6* is prevented without the use of any packing materials whatever, by the well-known method of providing a long, smooth fit in the stuffing-box bushing and turning a series of grooves around the valve stem as shown. These grooves are termed water grooves or expansion grooves, and each, in turn, acts as a leakage stop by reducing any pressure that may reach each groove and by filling up with accumulating fluid and deposit. This is generally referred to as "labyrinth packing."

440. Characteristic indicator cards for the Ames-Stumpf "Una-Flow" engine are shown in Fig. 267, where it will be seen that the compression takes place during nearly the entire stroke as referred to in paragraph 437. In these cards the steam pressure is 145 pounds per square inch. When the engine is exhausting into a condenser the compression during this long period does not exceed the live-steam pressure, even when the clearance space at the end of the stroke is very small. With an engine exhausting at atmospheric pressure the clearance space would have to be larger to keep down excessive compression pressures, and this may be accomplished in several ways, either by setting back the cylinder head, by making the piston head concave, or by placing an automatic valve in the piston head and opening the body of the piston to communicate with the exhaust ports. This latter method is illustrated in Fig. 274.

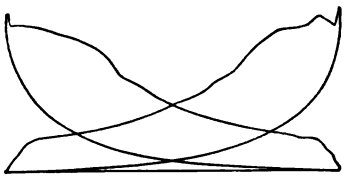

FIG. 267.—INDICATOR CARDS AT FULL LOAD, AMES-STUMPF "UNA-FLOW" ENGINE

An emergency clearance space is provided in condensing uniflow engines, as for example at *18*, Fig. 265, which may be opened by the valve *23* to the main cylinder should the vacuum in the condenser

Digitized by Google

drop for any reason. If it did the steam would be trapped in the cylinder at atmospheric pressure and the compression pressure would run too high if the regular clearance space were not increased in this or some other way.

The distinctive feature contributing to the high efficiency of the uniflow steam engine is the fact that the expanded and cooled steam does not return to the ends of the cylinder to cool the cylinder walls and the cylinder heads which would otherwise draw off some of the heat of the entering live steam. In order to maintain high surface temperatures for the entering steam to come into contact with, jackets are cast around the cylinder at the ends as shown at *8* and *12*, Fig. 265, and live steam is supplied to these jacket spaces.

441. Comparative indicator cards from the Stumpf uniflow engines are shown in Fig. 268 for an engine exhausting, in the case of the upper card, into the atmosphere, and in the lower card into a condenser. The large area to the left of the non-condensing card represents the clearance space in the cylinder head or piston head, as described in a preceding paragraph.

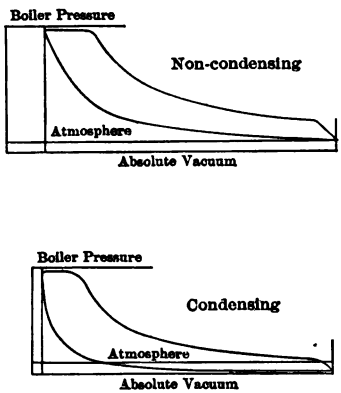

FIG. 268.—COMPARATIVE INDICATOR CARDS FROM AMES-STUMPF "UNA-FLOW" ENGINE

The construction of the uniflow engine enables it to use the steam in one cylinder through the same number of expansions as are accomplished in multiple-cylinder engines, as shown in the comparative indicator diagrams in Figs. 269 and 270. The former is for a quadruple-expansion engine and the latter for a single-cylinder uniflow engine. The cross-sectioned areas represent losses from the ideal cards, due to clearances in both cases and to receiver pressures in Fig. 269. The use of the single cylinder, however, for the uniflow principle of action involves large piston diameters for large loads, and this, together with the high initial steam pressures, calls for a heavy massive design and construction for the engine parts. The cylinder, therefore, is not only large in diameter but is longer than the ordinary single-cylinder engine. This comparison, however, should be carried further to include multiple expansion engines, and when so considered the diameter of the uniflow cylinder will be smaller than the low-pressure cylinder of the multiple-expansion engine for the same power, and there will be

Digitized by Google

only one cylinder against two, three, or four of older type of engine.

The "Universal Unaflow" Engine

442. A modification of the Stumpf uniflow engine has been designed by the Skinner Engine Co., of Erie, Pa., and has been manufactured and sold by them for regular service under varying conditions since 1912. The cylinder of the Skinner engine possesses the essential uniflow characteristics of the Stumpf or European engine, and in addition provides auxiliary exhaust poppet valves at about six-tenths of the exhaust stroke on each end of the cylinder. All

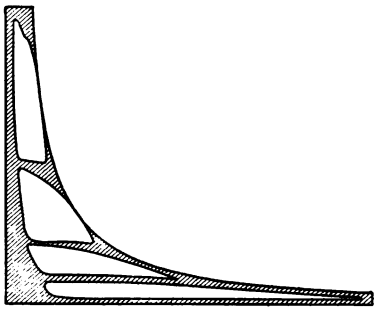

Fig. 269.—Indicator Card from Four-Cylinder Quadruple-Expansion Engine

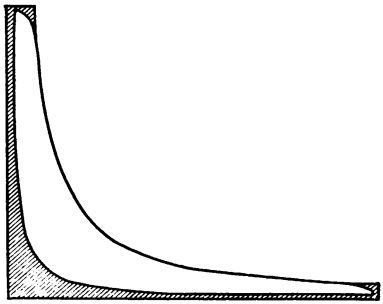

Fig. 270.—Indicator Card from Single-Cylinder Uniflow Engine

reserve clearance spaces in the cylinder or piston are omitted. The exhaust valves are positively operated when the engine operates non-condensing, and are automatically thrown out of service when operating condensing.

A section of the Skinner "Universal Unaflow" engine is shown in Fig. 271, where *1* is the rocker shaft operated from an eccentric which is under control of a flywheel governor. The rocker arm attached to this shaft carries a cam shoe *2* which operates the bell-crank *3*, and this in turn lifts the valve-stem head *4* and the double-seat poppet valve *5*. The piston is shown at the end of its stroke with a very small clearance which is characteristic of all uniflow engines when operating with a condenser. The main exhaust ports at *8* are full open for exhaust from the crank or frame end of the cylinder. The auxiliary exhaust port is at *11* and the exhaust valve at *12*. The exhaust valves are operated from an eccentric on the main shaft when the engine is exhausting into the atmosphere, and consequently the back-pressure line of the indicator card is horizontal, as shown up to the point *E* in the dash-line indicator diagram

Digitized by Google

in the crank end of the cylinder, Fig. 271. The back-pressure line in the ordinary uniflow engine would start to rise just below *C*, and,

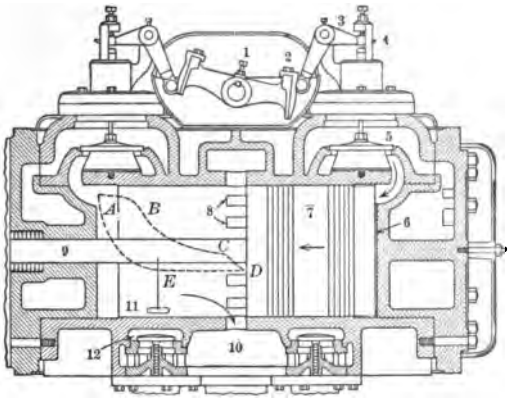

FIG. 271.—SKINNER "UNIVERSAL UNAFLOW" ENGINE

as stated in previous paragraphs, would rise to an excessive pressure were not a greater clearance provided for it at the end of the cylinder.

443. The form of poppet valve and the valve gear on the Skinner uniflow engine differs materially from that found on other steam

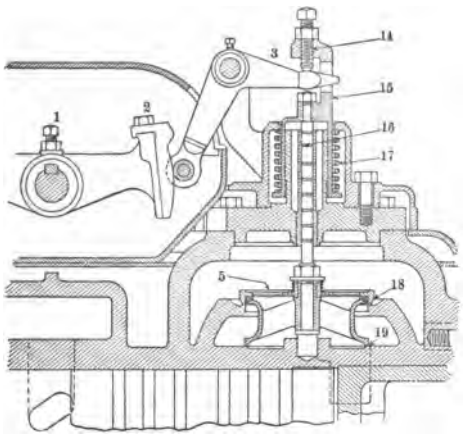

FIG. 272.—ADMISSION VALVE AND GEAR, SKINNER UNIFLOW ENGINE

engines. The valve is termed an "expanding poppet valve," its upper seat at *18*, Fig. 272, having a telescopic action of about .003 inch which permits it to close just before the lower seat closes at *19*. The lower seat is simply a faced surface on the bottom of the valve body. The telescopic joint is kept tight by metal packing rings which are sprung by the steam pressure which acts on them through

Digitized by Google

the very small openings at *18*. The valve is lifted by the bell-crank *3* and closed by the spring *17*.

444. The method of controlling the auxiliary exhaust valve of the Skinner uniflow engine is no less distinctive than the use of the valve itself. In Fig. 273, the rocker shaft *20*, carrying the operating cam arm *21*, receives an oscillating motion through an arm-and-rod mechanism from an eccentric on the main shaft of the engine. As the cam arm *21* rises, it lifts an idler cam *24* on a free countershaft *25* and this cam, in turn, lifts the single-disk poppet valve *12* and allows steam to exhaust through the port *11*. This port is also designated by the same number in Fig. 271. A single-disk poppet valve is essentially an unbalanced valve because it usually must be lifted against a pressure that is distributed over its top surface. In this case, however, the valve opens before the exhaust ports at the center of the cylinder are closed by the piston and, therefore, there is exhaust pressure on both sides of the disk and it is balanced except for the small area occupied by the valve stem on the under side. A single-disk exhaust valve has an advantage over a balanced double-seat poppet valve in this case in that it requires less steam clearance space.

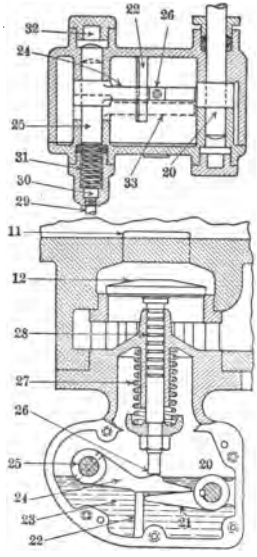

FIG. 273.—AUXILIARY EXHAUST VALVE AND GEAR, SKINNER UNIFLOW ENGINE

Assuming that the exhaust valve has been operating as explained above under non-condensing conditions and that the exhaust is now directed into the vacuum of the condenser, it may be seen that if the pipe *29*, Fig. 273, leads to the central exhaust outlet a vacuum will also be formed at *30* and that the air pressure at *32* will drive the countershaft *25* forward against the pressure of the spring *31*. This will also carry the intermediate or idler cam *24* with it to the position represented by the dash lines at *33*, and this cam will no longer come into engagement with the valve spindle at *26*. The operating cam *21*, however, will continue to receive its oscillating movement from the eccentric, but the intermediate cam *24* will have been drawn to one side of it also, and consequently no motion will be transmitted to the exhaust valve. The compression will, therefore, begin as soon as the piston covers the central exhaust ports.

Digitized by Google

The portions of the cams *21* and *24* that come into contact are designed to give pure rolling as nearly as possible, and all sliding parts are submerged in an oil bath. The top edge of the vertical wall at *22* acts as a slide and rest for the cam *24*, so that it may be maintained in proper elevation ready to take its working position again should the vacuum in the condenser fail and thus allow the spring *31* to exert its influence in pushing the countershaft *25* back.

Uniflow Engine with Auxiliary Exhaust Valve in the Piston

445. A valve-gear movement that differs entirely from any thus far considered is shown in Fig. 274, which is reproduced diagrammatically from a foreign uniflow engine. Excessive compression is guarded against in this engine by placing a piston valve in the main piston of the engine and operating it from the angular motion of the connecting rod at the crosshead end.

In Fig. 274, *A* is the end of the connecting rod, *B* the crosshead pin, and *C* an arm which is rigidly attached to the connecting-rod

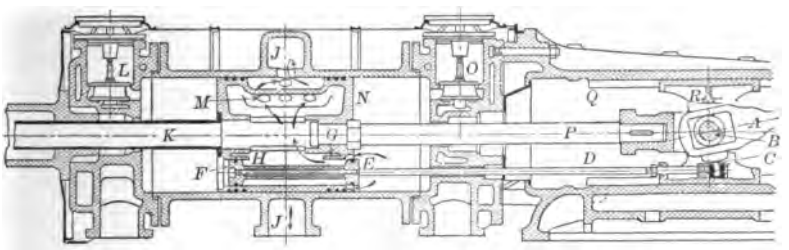

Fig. 274.—Uniflow Engine with Auxiliary Exhaust Valve in the Piston

end. At the end of arm *C* is a ball which works in the spherical socket which is attached to the rod *D* leading to the auxiliary exhaust valve *E F* in the main piston *N*. When the engine is on dead center the piston valve *E F* is central with respect to the main piston *N* and the valve ends fit in the cylindrical seats *G* and *H*. When the engine crank is vertical, or 90° from dead center, the connecting rod has its greatest angularity and the valve *E F* is the greatest distance to one side, as shown in Fig. 274, and auxiliary exhaust is taking place as indicated by the arrows. The engine piston must, of course, be made hollow for this method of relieving excessive compression and openings such as at *M* must be made in the central body of the piston to permit the exhaust through the regular exhaust port *J*. The admission valves are shown at *L* and *O* and are operated by a valve-gear mechanism similar to that described in the Ames-Stumpf uniflow engine.

Digitized by Google

SECTION VIII.—STEAM TURBINE VALVE GEARS

446. Steam control in the reciprocating engine requires that admission must take place during periods that are intermittent and that these periods must be definitely timed with the cycle. In the steam turbine, admission is continuous or in puffs in extremely rapid succession, the quantity being varied by the governor and the valve gear according to the load on the turbine. Except for the details of construction due to the high speed and exacting conditions under which the turbine is operated, the underlying principles of turbine valve-gear construction are simplified by the practically continuous steam admission. The floating or self-centering type of valve gear is largely used in steam turbine work.

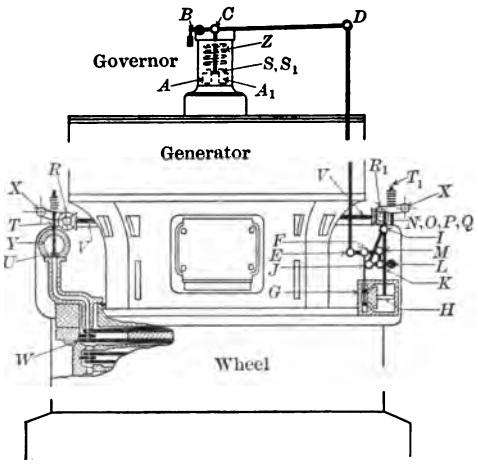

FIG. 275.—CURTIS HYDRAULIC VALVE GEAR

CURTIS STEAM TURBINE VALVE GEARS

447. Three types of valve gear are used by the General Electric Company in the construction of their Curtis steam turbines. These types are known as the—

Hydraulic Valve Gear,
Steam-Actuated Valve Gear, and the
Mechanical Valve Gear.

Curtis Hydraulic Valve Gear

448. The hydraulic gear is so named because oil under pressure is fed through a pilot valve which is under control of the turbine governor. This form of gear is illustrated in connection with the vertical type of Curtis turbine in Fig. 275 and in connection with the horizontal type in Fig. 278. Fig. 275 is rearranged and enlarged in Fig. 276. The valve mechanism, it will be noted, is quite similar in both the vertical and horizontal types, the principal difference being that the latter is simplified by the omission of the differential con-

Digitized by Google

nection rod *I J*. The several parts are similarly lettered in both cases, and are as follows:

A A_1, Governor weights.
B D, Governor beam or lever.
C S S_1, Governor stem and weight disk.
D E, Governor connection rod.
E M, Floating lever.
F G, Pilot valve connection rod.
G, Pilot valve.
H, Valve-operating piston.
H I, Piston rod (Figs. 275–6 only).
I J, Differential connection rod (Figs. 275–6).
L J, Differential lever arm.
K M, Differential link.
N, Rack.
O, Spur wheel.
P, Cam shaft.
Q_1 Q_2 . . . , Cams. (Also Figs. 276–7).
R_1 R_2 . . . , Cam rollers.
R_1, *X*, Controlling valve lever.
T_1 U, Controlling valve stem.
U, Poppet valve and valve seat.
V, Cross transmission shaft (Fig. 275 only).
W, First turbine wheel.
X, Controlling lever shaft.
Y, Steam chest.

449. The oil, which is under pressure, is used to operate the piston *H*. The Curtis turbine has multiple admission valves, each having its own controlling mechanism, Q_1 R_1 T_1 *X*, Figs. 276–7, and all operated by a single cam shaft *P*. Eight separate admission valves are represented at $T_1 - T_8$ in the top view, Fig. 277. In Fig. 275 two sets of multiple valves are used, one set on each side of the turbine, both connected by a cross shaft *V*, and all operated by one governor and one floating valve gear.

FIG. 277

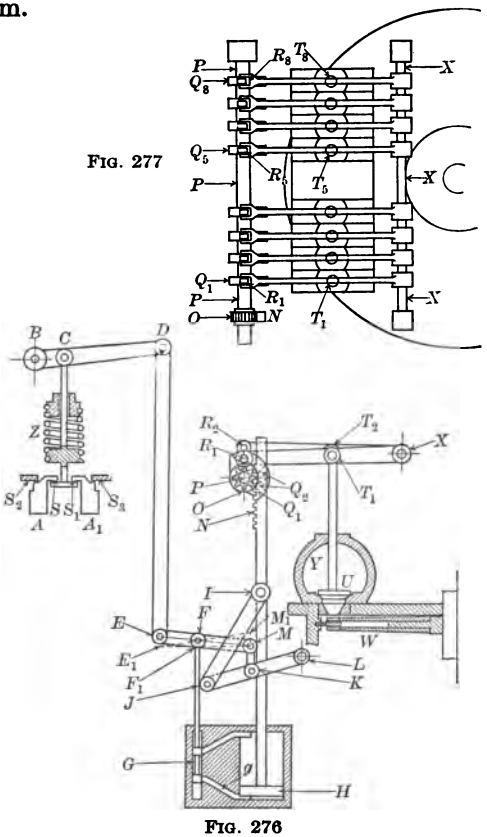

FIG. 276

FIGS. 276 AND 277.—CURTIS HYDRAULIC VALVE GEAR—DIAGRAMMATIC ARRANGEMENT, ENLARGED

Digitized by Google

The reason for using multiple valves in this way lies in the fact that all valves that are open at all are wide open, with one exception, and that one is the only one that is throttling the steam. The nozzles thus receive full steam pressure and work to best advantage.

450. In the operation of the turbine, steam is admitted through a strainer to a combined emergency and stop valve, not shown in the illustrations, to the steam chest Y. When the turbine is at rest and the governor weights "dead," all the valves are open and the last valve to open is just on the point of starting to close. As the turbine gains speed the weights A A_1, Fig. 276, fly out against S_2 and S_3 as fulcra, thus causing the governor beam $B\,D$ to turn down about the center B; the point E of the floating lever to move down to E_1 turning momentarily about M; the point F to move to F_1; and finally the inside admission pilot valve G to move down and open the port g, Fig. 276, to the oil pressure. As the piston H moves up, the motion is transmitted through the links $H\,I$, $I\,J$, $J\,L$, and $K\,M$ moving the point M of the floating lever about E_1 as a temporarily fixed center to the position M_1, and also the point F_1 back to F, thus closing both ports. The piston H then comes to rest and will remain stationary so long as the speed remains constant.

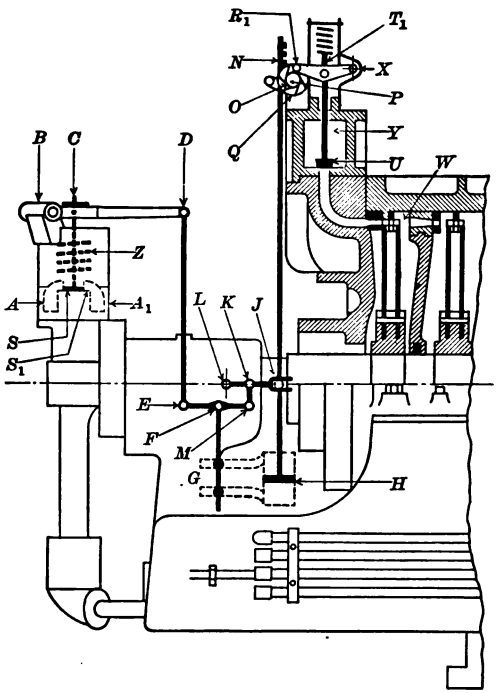

FIG. 278.—CURTIS HYDRAULIC VALVE GEAR, HORIZONTAL TYPE

As the piston H moves up, one admission valve after another is closed by means of the rack and cams, until the proper speed is attained, when the centrifugal force of the governor weights balances the tension in the governor spring Z. Each position of the governor weights determines a definite position of the piston H in the operating cylinder and consequently the opening of a definite number of con-

Digitized by Google

trolling valves. The pilot valve has a very small lap, thus permitting only a very slight variation of speed. The sensitiveness of the turbine depends on the lap of the pilot valve as well as on the governor.

The description of the action of the hydraulic valve-gear mechanism given above for the vertical type of turbine applies also to the valve gear for the horizontal type which is shown in Fig. 278.

Curtis Steam-Actuated Valve Control

451. A longitudinal section of an assembled three-stage 1,000-Kw. to 2,500-Kw., 3,600-R.P.M. Curtis "Rigid Frame" steam turbine is shown in Fig. 279. The parts are numbered and are as follows:

1, Turbine shaft.
2, Coupling guard.
3, Oil deflector, main bearing, generator end.
4, Oil fan, main bearing, generator end.
5, Worm for governor and pump drive.
6, Worm nut.
7, Main bearing lining.
8, Oil rings.
9, Oil fan, main bearing, turbine end.
10, Oil deflector, main bearing, turbine end.
11, Steam deflector, main bearing.
12, Main bearing, cap, connection piece, and oil tank.
13, Steam port casting.
14, First stage nozzle.
15, First stage intermediate.
16, Gridiron valve ring.
17, Second stage nozzle.
18, Second stage intermediate.
19, Snap rings.
20, Third stage nozzle.
21, Wheel bushings.
22, Retaining ring.
23, Exhaust head.
24, Outboard bearing.
25, Balancing hole cover.
26, Third stage wheel.
27, Third stage diaphragm.
28, Wheel casing (split).
29, Second stage wheel.
30, Second stage diaphragm.
31, Balancing ring.
32, First stage wheel.
33, Balancing hole cover.
34, High-pressure head.

452. An enlarged detail view showing the steam nozzles, the revolving and stationary buckets, and other details of construction for a two-stage 750-Kw., 3,600-R.P.M. condensing Curtis steam turbine is shown in Fig. 280. The present detail illustrations may help to a fuller understanding of Fig. 279 by noting that the corresponding features in the two figures are as follows:

Digitized by Google

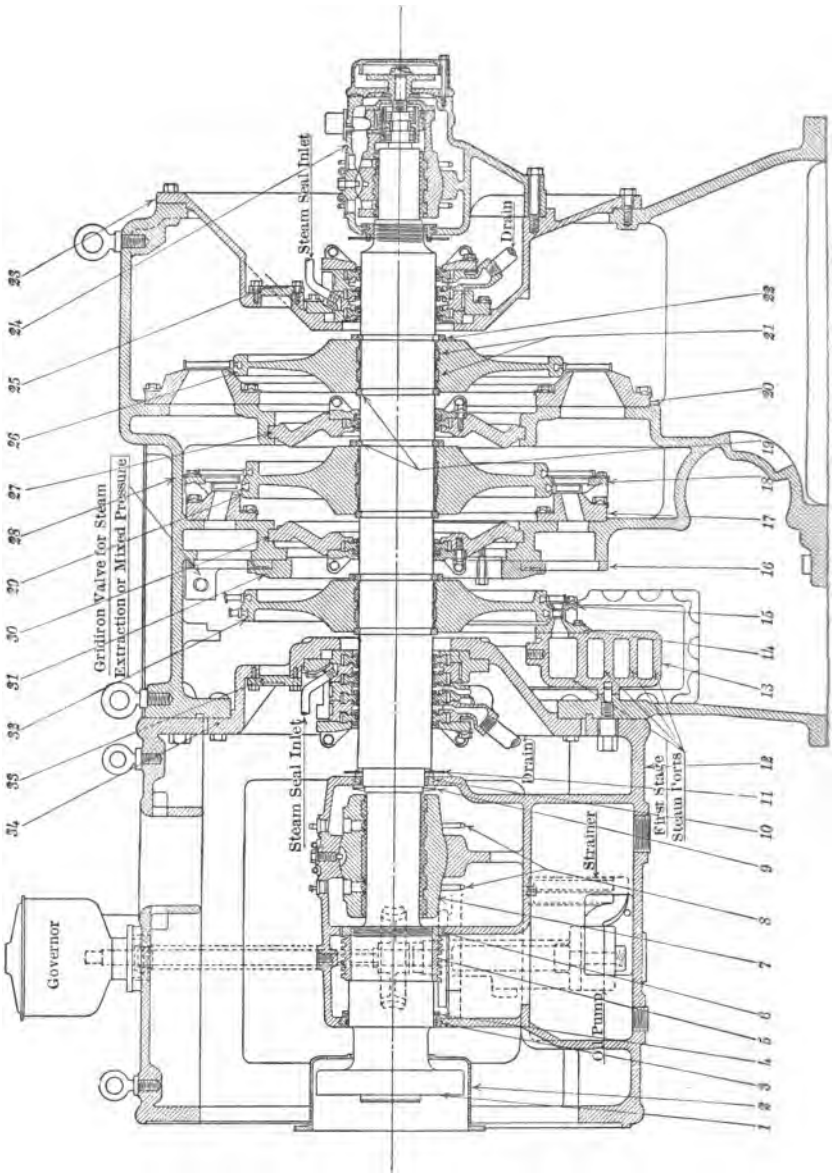

FIG. 279.—ASSEMBLY OF THREE-STAGE 1,000-KW. TO 2,500-KW., 3,600-R.P.M. CURTIS RIGID FRAME STEAM TURBINE

Digitized by Google

The first stage nozzle,	14	in.,	Fig. 279,	corresponds	to	3	in	Fig.	280.
The first stage wheel,	32	"	"	"	"	" 4	"	"	"
The first stage intermediate or stationary buckets.....	15	"	"	"	"	" 5	"	"	"
The second stage nozzle,	17	"	"	"	"	" 8	"	"	"
The second stage wheel,	29	"	"	"	"	" 9	"	"	"
The second stage intermediate or stationary buckets.....	18	"	"	"	"	"10	"	"	"

453. A recent form of turbine gear, operated by steam-actuated valves, is shown in Fig. 281. A pilot valve is shown at $A\,A_1$, consisting of two solid piston valves mounted on a stem extending in both directions and ending in enlarged cylindrical grooved guides. The grooves prevent leakage. This pilot valve moves up and down in the bushing $B\,B_1$ and is operated from the point C of the floating lever $D\,E$. Steam is "bled" into the pilot valve steam chamber (the space between the pistons A and A_1) through a small inlet opening shown by the circle F. When the turbine and the governor are at rest the position of the floating lever $D\,E$ is such that the pilot valve is moved upward from the position shown in Fig. 281, and when steam is turned on it passes from

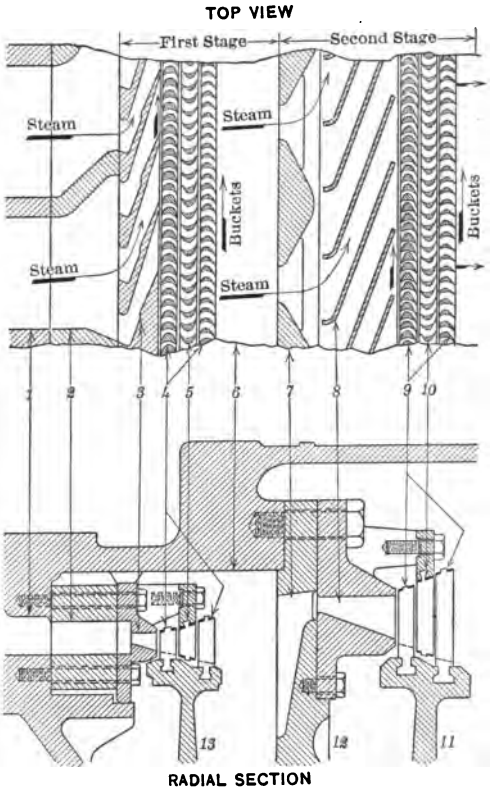

FIG. 280.—SHOWING STEAM NOZZLES AND REVOLVING AND STATIONARY BUCKETS FOR TWO-STAGE CURTIS STEAM TURBINE

Digitized by Google

F through the opening shown by the small circle at A, through the passageway shown by dotted lines to the under side of the

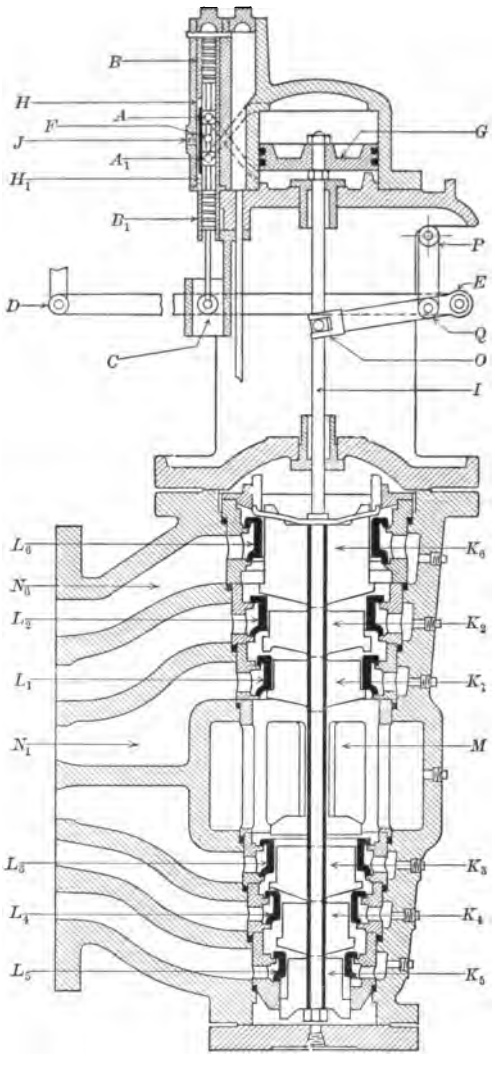

FIG. 281.—CURTIS STEAM-ACTUATED VALVE CONTROL

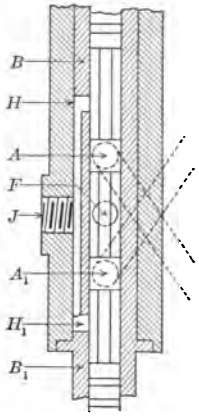

FIG. 282.—PILOT VALVE. DETAIL ENLARGEMENT FROM FIG. 281

operating piston G. Any steam on the upper side of the piston escapes through the other passageway shown also by dash lines, through the opening at A_1 and through the port H_1 in the pilot valve bushing to the exhaust pipe at J. It will be observed that the passageways from A and A_1 are criss-crossed. An enlarged view of these parts is given in Fig. 282.

454. When the operating piston G is raised, it carries with it the piston rod I and the attached valve hangers K_1 . . . . K_6. All of the valve hangers, it will be observed, have small shoulders projecting from the bottom, the one at K_1 being in contact with the

Digitized by Google

bottom of the double-seat poppet valve L_1, and the remaining valve-hanger shoulders being at increasing distances from the corresponding valves. The greatest distance is between K_6 and L_6.

As the piston G rises, the six main double-seat valves are all opened in the order of the subscript numbers and the engine starts up with live steam which enters the valve chamber from a combined throttle and emergency valve, not shown, at M and passes through all of the valve openings and the ports N_1 . . . . to the first stage nozzles. When the turbine reaches a speed from 1 to 3 per cent below normal the governor begins to operate and closes the valves one by one, starting with K_6, until the speed becomes constant. The order of closing the valves varies in different turbines according to their purpose and to the details of construction. In some smaller turbines the valves close in order successively, starting from the bottom.

455. The method by which the governor controls the valve openings and holds them stationary when the turbine is at normal speed is as follows: Starting with the governor "dead," the points D and C are above, and E is at, the position shown in Fig. 281. The port A is open. When auxiliary steam is admitted at F the piston G is raised, and also the valves L_1 . . . . and the point O of the forked or second floating lever which now fulcrums about Q at the end of the hanging support PQ. As O moves up, both the points E and C move downward about the point D, which is now stationary, and they remain down until the governor takes hold later on. With C down, the pilot valve is again down and on center, and the operating piston G is held up by the steam underneath. If there is condensation or leakage and the piston drops, the point O drops and this motion carries back to and lifts the pilot valve which, having small or no lap, soon admits steam to send the piston up, and this in turn again places the pilot valve on center. This action may repeat itself rapidly and take the nature of a continuous vibration.

If the turbine reaches normal speed short of full load or "over load," the governor, through mechanism shown in Figs. 283 and 284, moves the points D and C downward about the point E, opens the pilot-valve port A_1, Fig. 281, permits steam to act on the top of piston at G and moves it and the point O down. As O moves down it turns about Q, moves E and C up about D as a pivot and causes the pilot valve to center and close the passageway A_1 as well as the exhaust A. This will hold the piston at G stationary at the proper position in its stroke, depending on the number of valves that need to be open to give the normal speed. If the piston at G moves slightly up or down, the very small lap of the pilot valve permits it

Digitized by Google

to respond at once and to restore G to its proper position. From the above it may be seen that as the turbine rises above normal speed the governor causes the pilot valve to move down, and, as it falls below normal, to move up.

456. The mechanism from the governor to the operating cylinder is shown in end and side views in Figs. 283 and 284 respectively. The governor case is shown at Z, the governor itself being constructed

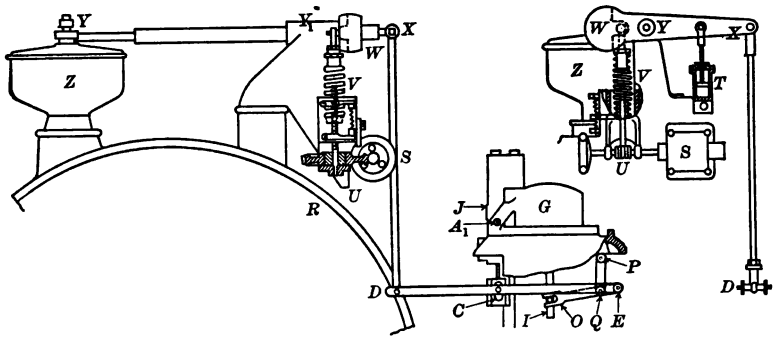

FIG. 283 FIG. 284

FIGS. 283 AND 284.—SHOWING MECHANISM FROM GOVERNOR TO OPERATING CYLINDER, INCLUDING SYNCHRONIZING DEVICE

as shown in Figs. 290 and 291. A governor lever represented in end view at Y in Fig. 283 rotates the governor transmission shaft $Y\ Y_1$, shown also at Y in Fig. 284. This governor lever is similar to the one shown at $Q\ M$ in Fig. 291, and the shaft M in that figure corresponds to Y in Fig. 284. The weighted lever $W\ X$ is keyed to the governor transmission shaft Y and oscillates with each change of the governor weights. A too violent oscillation is prevented by the dashpot T. A connection rod $X\ D$ carries the fluctuating governor motion to the main floating lever $D\ C\ E$. The action from this point on has already been explained in the preceding paragraph. In Figs. 283 and 284 is also shown a motor-operated synchronizing device, consisting of a tension spring V connected at one end to the lever $W\ X$, and of a reversible motor S which controls the position of the other end of the spring which is attached to a traveling nut operated by a screw through the worm and gear shown at U. Under normal operating conditions, the spring V is under half tension, and through the lever $W\ Y$ imposes a load upon the governor. To synchronize with another machine, the tension of spring V may be increased or decreased by means of motor S, thereby increasing or decreasing the load on the governor, and hence increasing or decreasing

Digitized by Google

the speed of the turbine up to a limit of about 2 per cent. This limit is maintained by means of a pin on the lower end of spring V, which, when approximately 2 per cent change in speed has been obtained, opens a switch and stops the motor S. The motor then can not be started again except in the opposite direction.

457. The combined throttle and emergency valve by which steam is admitted to the valve chest M of Fig. 281 is shown in Fig. 285. The valve itself is shown in solid black, and is a single-seat poppet valve A with a balancing piston B attached to the valve body or "spool." The poppet-valve disk contains ports C and a seat for an auxiliary valve E. The valve mechanism is shown in the position it takes just after being tripped. The valve stem $L\,F$ bottoms on the auxiliary valve E. If the handwheel L is now turned clockwise the sliding nut K will be moved up because of its engagement with the thread J on the valve stem. A trip arm $Q\,G$ is attached to this sliding nut by a pin P and it, too, is raised about the hanging center G until the end Q engages the trip hook $M\,N$. The valve is then ready to be opened.

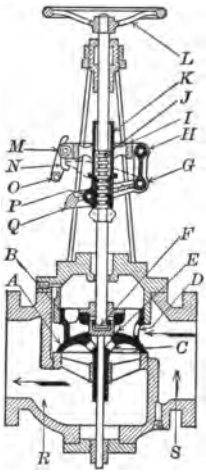

FIG. 285.—COMBINED THROTTLE AND EMERGENCY VALVE

To admit steam to the turbine, the handwheel L is now turned counter-clockwise and the auxiliary valve E is raised slightly above the poppet-valve-disk seat, the valve stem now bearing on its threads in the sliding nut which is held by the hook $M\,N$. Live steam then passes from the inlet side S through the opening D to the under side of the main-valve disk, nearly balancing it, and permitting the entire valve to be easily raised upon further turning of the handwheel L in the same direction. By turning the handwheel in the opposite direction the valve will close. Under emergency action the arm-and-hook arrangement $O\,M\,N$ is drawn back by a separate emergency governor or by hand and the trip arm $Q\,G$, now in the position shown by dash lines, drops, carrying with it the sliding nut K and the main and auxiliary valves A and E. The design of the valve is such that there is always a slight closing pressure on the valve. The emergency governor consists of a spring arm mounted on the main shaft of the turbine. When the speed exceeds the normal speed by 7 to 10 per cent the arm flies out and through intervening mechanism releases the trip hook $O\,M\,N$.

Digitized by Google

The Mechanical Valve Gear for Curtis Steam Turbine

458. This "mechanical gear," as well as the "steam actuated" and some other forms of steam control for the Curtis turbine are due to Mr. Richard H. Rice, M.E. The mechanical gear under present

FIG. 287

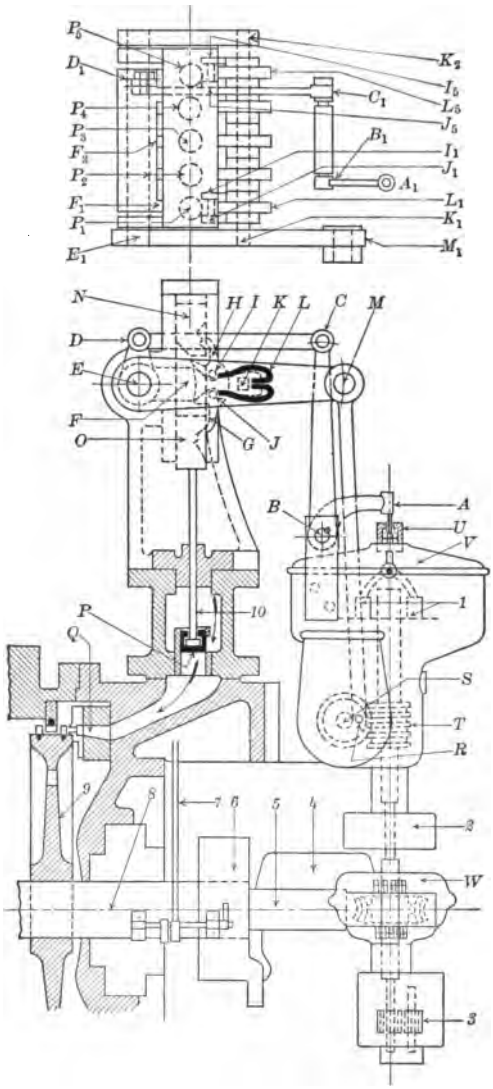

FIG. 286

FIGS. 286 AND 287.—CURTIS MECHANICAL VALVE GEAR

Digitized by Google

consideration differs from other turbine valve gears in that it does not make use of steam or oil pressures, nor does it employ the floating lever, which is also a characteristic of turbine valve gears generally. Partial front and top views of this mechanical gear are shown in Figs. 286 and 287 and an enlarged detail view is added in Fig. 288.

There are a number of separate valves which admit steam to the turbine wheels, five being used in the illustrations given herewith, as shown at P in Fig. 286 and at $P_1 \ldots . P_5$ in Fig. 287. The object of the valve gear is to lift, say, P_1 at intervals when the turbine is running under a light load; to keep P_1 lifted continuously, and to lift

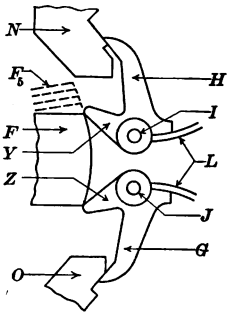

FIG. 288.—SHIELD PLATE AND PAWLS, DETAIL ENLARGEMENT FROM FIG. 286

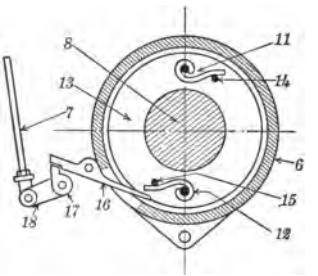

FIG. 289.—EMERGENCY TRIP GEAR

P_2 at intervals under a slightly heavier load, and so on, the maximum capacity being reached when all the valves are lifted all of the time.

The lifting of the valves is accomplished by the valve gear, as follows: A worm on the main turbine shaft engages with a worm wheel as shown at W, Fig. 286, the latter being mounted on a spindle which carries another worm at T. The worm wheel, which engages with T, carries a pin R to which the lower end of the drive rod $R\,M$ is connected; while the upper end of the rod is connected to the steam lever $M\,E$ which oscillates about the fixed center E, the extremity M swinging in the path of the short arc shown at M. The vibrating steam lever $E\,M$ carries a fixed cross-bar $K_1\,K_2$, and this in turn carries a series of pins I and J, on which five sets of pawls are mounted, those shown at H opening the valves and those at G closing them. On the cross-bar $K_1\,K_2$ are also mounted five bent springs, $L_1 \ldots . L_5$, the ends of the springs being attached to spurs on the corresponding pawls as shown close to I and J, in Figs. 286 and 288. These springs serve to keep the toe of each pawl H and G against the latch or ratchet blocks N and O, which act as a crosshead carry-

Digitized by Google

ing the valve rod *O P*. If the valve-gear construction stopped here, the pawls would engage with the latch blocks alternately on the up and down strokes, and all of the valves would open and close together for a short period during each turn of the worm wheel *S*.

459. In order to complete the valve-gear mechanism, other parts are added which are under the control of the governor. These parts are shown in Figs. 286 and 287. The governor, which is indicated at *V*, Fig. 286, is the same as the one which is illustrated later in detail in Figs. 290 and 291. As the turbine speed rises above its normal value the arms of the governor weights move inward and the ball joint *U* moves upwards so that the double-arm lever *A B C*, in turning on its fixed pivot *B*, swings the end *C* on the short arc shown at *C*. A link *C D* connects with a bell crank *D E F* which rides freely on the shaft *E*. The end of the bell crank at *F* is known as a shield plate, and is so formed as to engage with the heels *Y* and *Z* of the two pawls shown on enlarged scale in Fig. 288. If the turbine speed rises above normal, as supposed, *C* and *D* both move to the left and the shield plate moves up, thus keeping the upper pawl *H* from engaging with the latch block *N* and allowing the lower pawl *G* to engage with the latch block *O*, thus closing the valve on the down stroke. In order to keep all valves from lifting and closing at the same time the five bell cranks with their formed shield plates are set on a spiral, each being advanced an equal small angle from the preceding one. When the turbine is shut down and the governor at rest, the shield plates are all dropped so as to engage only the heel plates of the lower pawls, thus preventing them from acting to close their respective valves. At the same time, the upper pawls are all free and on being raised are ready to engage with the upper latch blocks, thus lifting the valves and permitting open ports to be maintained for the starting of the turbine. A valve, valve stem, and latch block, when once raised, remain so, due to the unbalanced pressure on the valve *P*, until the lower pawl is permitted to push them down again. The unbalanced upward pressure on the valve is due to the pressure area taken away from the top of the valve by the valve stem *10*.

460. An emergency valve gear is also used and is designed to shut down the turbine in case the regulating valve gear should fail to function. The emergency governor represented at *6* in Fig. 286, and in detail in Fig. 289, is located on the main shaft *8* and consists of two independent flat springs, *11* and *12*, set diametrically opposite each other on a revolving disk. These springs are rigidly fastened at one end to the disk and the other end of each spring rests under light pressure against pins *14* and *15* which are fastened in the disk.

Digitized by Google

If the turbine reaches the emergency speed the centrifugal force of the spring exceeds the spring force and the free ends of the springs fly out from the pins and trip a latch *16*, which through several arms and links, *17*—*7*, allows an emergency weight, or arm such as is shown at *Q G* in Fig. 285, to drop and to close the throttle or the emergency valve which is located in the main steam line just in front of the steam chest shown at *10*, Fig. 286.

461. Other features of construction, not referring particularly to the valve gear, are represented in Fig. 286, as follows: *1*, the governor weights; *2*, a flexible coupling; *3*, an oil pump consisting simply of two spur gears running in close mesh with each other and with but slight clearance in the casing; *4*, the shaft bearing, and *9*, the first-stage bucket wheel.

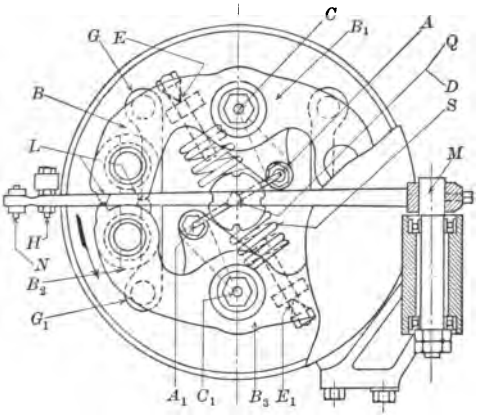

FIG. 290

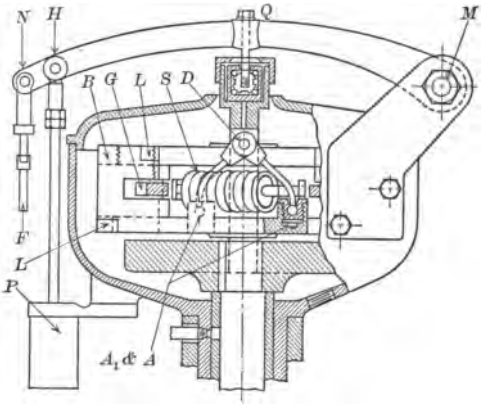

FIG. 291

FIGS. 290 AND 291.—CURTIS STEAM TURBINE GOVERNOR

Curtis Steam Turbine Governor

462. The governor used on the steam-actuated and mechanical valve gears of the Curtis types is shown in Figs. 290 and 291, the former being a plan or top view, and the latter a partial vertical section. The two governor weights B B_1 and B_2 B_3 are pivoted on ball bearings at C and C_1 respectively. The movement of these weights due to centrifugal force and inertia is resisted by a coiled tension spring S which connects the two weights through the knife-edge supports at E and E_1. As the weights swing out the points A and A_1, which are on

Digitized by Google

arms extending inward from the lower part of the governor weights, move toward each other and thereby raise the pin D through the intervening Y-arms shown at $A\,D$ and $A_1\,D$. When D rises, Q also rises, and swings the governor lever $M\,N$ about M, thereby causing one or more of the steam valves to close and cut down the steam admission until the normal speed is again reached. The manner in which it is done is shown in Fig. 281 and explained in the text accompanying that figure. The rod $N\,F$, leading to the valve gear, Fig. 291, is used on some types of construction. In Fig. 281, however, this connection rod and the part $N\,Q$ of the lever are not used, the governor motion being there taken from the shaft at M, Figs. 290 and 291. The point M corresponds to Y of Fig. 284.

463. The rod $H\,P$ connects the governor lever with a piston in the oil dashpot shown at P, the purpose of this attachment being to damp or to control any supersensitiveness of the governor. The dashpot is filled with an oil of such viscosity as will permit a free but not a rapid motion of the governor lever. Small projecting lugs L are cast on the ends of the governor weights. They act as stops in limiting the swing of the weights. There are two lugs on each weight, the upper right hand one on $B\,B_1$, engaging with the upper left hand one on $B_2\,B_3$. Two bars, similar to $G\,G_1$, connect the weights and compel them to act in unison.

Westinghouse Steam Turbine Valve Gears

464. In the Westinghouse steam turbine three types of gears are in general use, although the manufacture of one of them, the one with the steam relay, is now discontinued by the Westinghouse

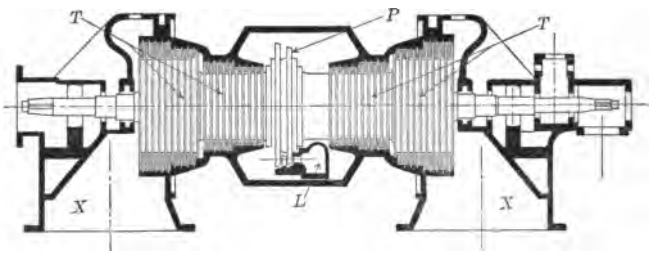

Fig. 292.—Westinghouse Double-Flow Turbine, Rotor and Casing

Machine Company, except in machines of older design. The three types may be described as the:

Direct,

Hydraulic or Oil-Operated Relay, and the

Digitized by Google

Steam-Operated Relay.

The first two types of gear give practically uniform steam flow to the turbine under full working load, while the steam-operated relay may admit the steam in a series of puffs as explained in Paragraph 480.

465. A longitudinal section of a Westinghouse double-flow turbine is shown in Fig. 292. The steam inlet is at L, impulse wheel at P, reaction blades at T T, and exhaust at X X.

Westinghouse "Direct" Valve Gear

466. In the Direct Type of valve gear the governor acts directly on the valve as shown in Figs. 293 and 294. The governor weight *12* is shown in its outermost position as it swings about the knife

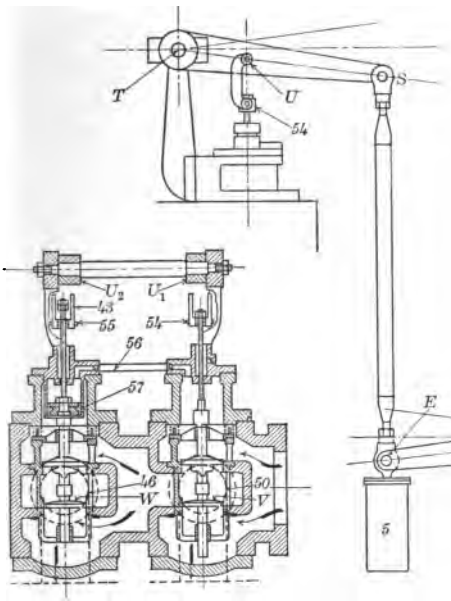

FIG. 293.—PRIMARY AND SECONDARY VALVES CONTROLLED BY "DIRECT" VALVE GEAR

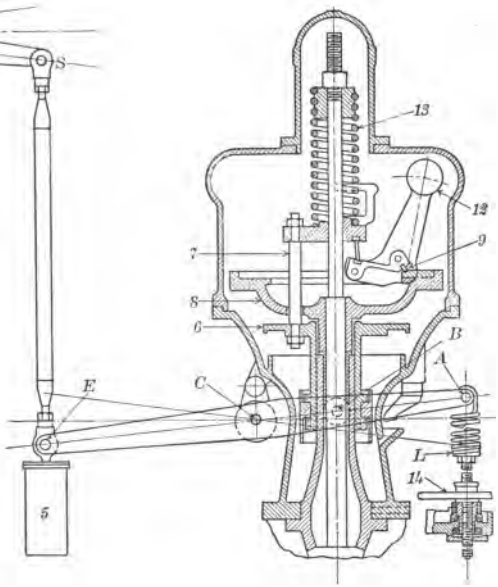

FIG. 294.—WESTINGHOUSE TURBINE "DIRECT" TYPE VALVE GEAR

edge *9* and compresses the governor spring *13* its maximum amount, thus lifting the point B of the governor lever A B E to its highest position. The point E is then in its lowest position, and so are the points S and U. The governor lever swings about the point C which has a slightly oscillating motion to accommodate the point B which moves in a straight line up and down. The point U represents the

Digitized by Google

ends of the two main valve-stem connecting links, one of which is shown at U_1 in Fig. 293 and the other at U_2. U_1 connects with the primary valve stem of the primary valve at *54*. U_1 and U_2 move together and when they are both all the way down, both the primary and secondary valves V and W are closed.

467. The spring at L is an auxiliary governor spring and is set with practically no tension when the governor weights are full in. The main governor spring *13* is then set by means of the adjusting nut at the top so that the turbine runs at 5 per cent below normal speed at no load. The auxiliary spring L is then tightened by means of the handwheel *14* until the turbine runs at normal speed.

468. Steam enters as shown by the arrows in Fig. 293, passing through the primary valve V to the turbine admission pipe shown at *50*. When the primary valve V has been raised by the governor so that the admission area between the valve and valve seat is about equal to the admission area in the plane of the valve seat, the secondary valve W should begin to open, and this is regulated by the space that is left between the hanger seat *55* and the lock adjusting-nuts *43* on the secondary valve stem.

469. In order to insure that the secondary valve will remain closed until it is needed, a pressure piston is provided at *57*. The full steam pressure, before it passes through the primary valve, is carried to the top of piston *57* through the pipe *56*. The steam pressure on the under side of piston *57* is equal to the pressure after the steam passes through the primary valve and, up to the time that the primary valve is full open, this is less, due to throttling, than the initial pressure. When the secondary valve begins to rise, the primary valve also rises with it, because of the mechanical connections, but the primary valve does not admit any more steam to the turbine admission pipe *50* because it has already reached its capacity. The additional necessary steam enters the turbine through the pipe *46*.

470. An oil dashpot is shown at *5*, its purpose being to steady the action of the governor by dragging a piston through an oil-filled cylinder, shown in section at *5* in Fig. 297. The method of driving the governor weights *12* through the vertical spindle and the governor supporting disk *8* is shown more completely also in Fig. 297. The compound motion derived from the governor weights acting against the compression spring *13* is both rotary and vertical and is transmitted from the spring seat through the bolts represented at *7* to the clutch disk *6*. This disk has a cylindrical extension, the lower enlarged end of which has a circular groove into which is fitted

Digitized by Google

an internal ring of a sleeve which carries on its outer surface two pins, one of which is shown at *B*. To these pins is pivoted the governor lever *A B E*. Inasmuch as the governor lever swings up and down in its own plane, the sleeve which carries the pins is constrained to have vertical motion only, and the cylindrical clutch turns freely on the inner rings of the sleeve.

Westinghouse Hydraulic or Oil-Operated Relay Valve Gear

471. The general arrangement of the hydraulic valve gear with the oil-operated relay in relation to the turbine casing is shown in

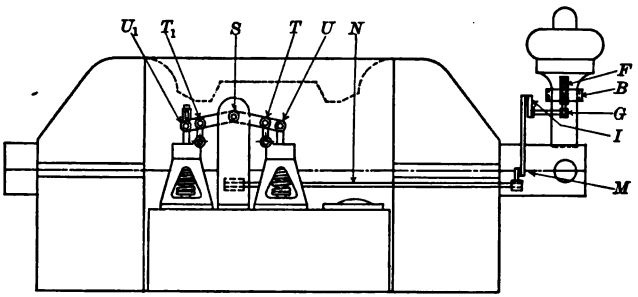

FIG. 295.—GENERAL ARRANGEMENT OF OIL-OPERATED RELAY GEAR AND TURBINE CASING

Fig. 295. Diagrammatic detail views of the valves, intervening valve gear, and governor are shown in Figs. 296 to 298. The reference letters and numbers correspond in all four figures.

472. The intervening valve gear and valve parts which lie between the governor and the main valves operate as follows: As the governor weights move out or in, they transmit motion through the arms and links *A B C E*, Fig. 297, *D E F*, *F G*, *G H I*, *I M*, and *M N* to the valve-gear shaft *N*. If, for example, the governor weights move out, the point *B* of the lever moves up about *C* as a center and the motion through the intervening mechanism is such that *O* moves down. As it does so, the points *P* and *Q* move down about the temporarily fixed pivot at *R* and the pilot valve *Y* also moves down and opens the port leading to the lower side of the relay piston *Z*. An enlarged view of the pilot valve is shown in Fig. 298. Oil under pressure then flows from the inside supply port *25* through the passageways *26*, *40*, *38*, *36*, and *37*, and lifts the piston *Z* and the two pins *R* and *S* which are fastened to the relay piston rod. As *S* rises the other end *U* of the lever falls and with it the main admission valve *V*, thus cutting down the steam supply. When the main valve

Digitized by Google

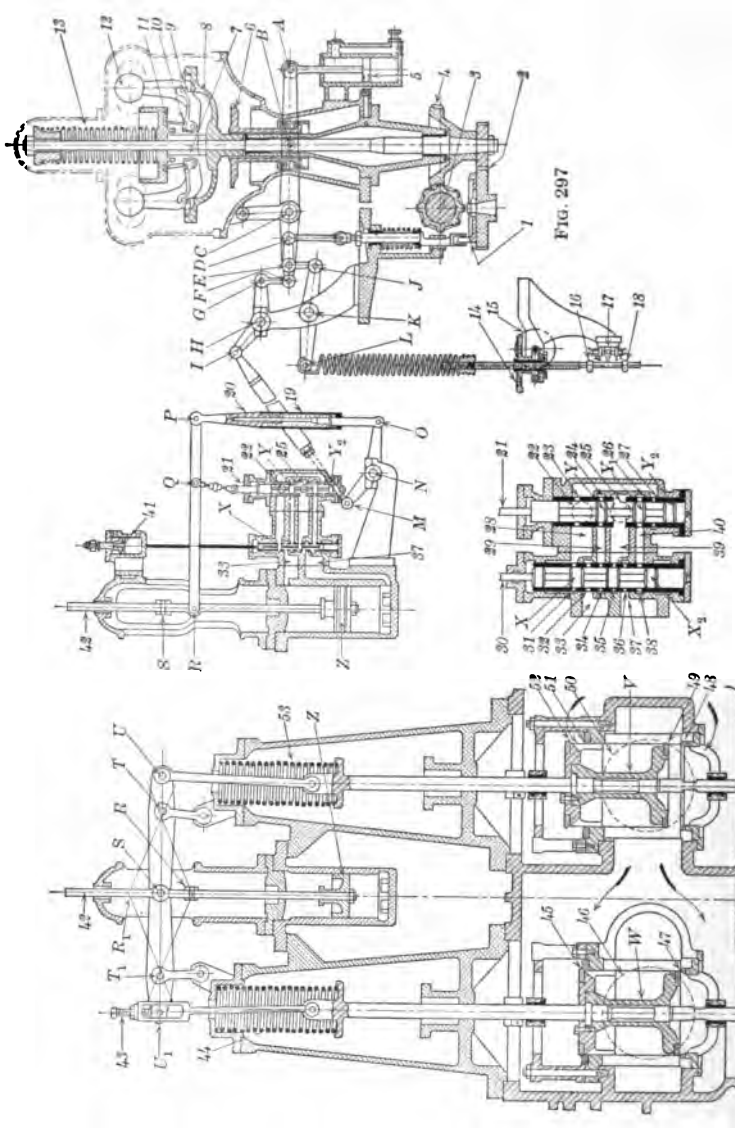

FIG. 296.—PRIMARY AND SECONDARY VALVES CONTROLLED BY OIL-OPERATED RELAY VALVE GEAR
FIG. 297.—WESTINGHOUSE OIL-OPERATED RELAY VALVE GEAR, END VIEW IN DIAGRAMMATIC DETAIL
FIG. 298.—ENLARGED DETAIL OF PILOT AND AUTOMATIC STOP VALVES

Digitized by Google

has moved down enough to regulate the steam supply according to the load and the desired speed, the pin R will be moved up about the temporarily fixed pivot P and will have carried with it the pin Q and the pilot valve Y, thus closing the oil port and holding the relay piston Z at rest until the next change in the speed of the turbine. For any one speed of running the pilot valve Y covers the ports of admission to the two sides of the piston Z, except for a slight oscillation which is described below, and which allows the oil from *25* to enter both above and below the piston Z, at intervals in rapid succession, thus causing Z to be constantly oscillating with a very small movement, about $\frac{1}{16}$ to $\frac{1}{8}$ of an inch.

If the governor weights move in, the part $C\,E$ of the governor lever moves up, the pilot valve Y moves up, admitting oil to the upper side of Z, the relay piston Z moves down, and the main valves Y and W move up, admitting more steam.

473. The phase of the valve mechanism shown in Figs. 296 and 297 is for normal speed at normal full load. When the turbine is at rest, the governor weights are at their full inward positions, the arm $N\,O$ full up, the pilot valve Y in its top position with free opening from the oil supply pipe *25* to the top of piston Z, and there is no oil pressure.

Upon starting the turbine, the auxiliary oil pump is first set in operation, thus creating a pressure in *25* and driving oil through the passageways *24*, *29*, *34*, *32*, and *33*, causing the piston Z to descend and thus open wide the primary valve V. Steam is then admitted by opening the valve, not shown, in the steam main leading to the primary valve. The speed variation is designed not to exceed 4 per cent for a full range of travel of the valve parts, and the governor does not "take hold" until the turbine is nearly up to its normal speed. When the turbine is not in use the valve V is kept to its seat by the spring *53* acting on the valve stem. Steam is admitted as indicated by the arrows from a strainer, not shown, to the operating valve V, and thence to the turbine through the circular opening represented by the dash-line circle *50*. The valve W, Fig. 296, is a secondary valve, being designed, by means of an adjustable backlash device at *43*, so that its time of opening may be changed by the operator. It is usually regulated so as to open when the primary valve has reached its maximum opening. In the position shown, the primary valve has just reached its maximum admission position in which the circumferential and transverse openings are equal, and the secondary valve is just ready to open because the block at U_1 has just come into contact with the regulating

Digitized by Google

screw *43* and any further motion of U_1 will open the secondary valve *W*.

474. Inasmuch as a governor must first absorb energy sufficient to overcome the friction of rest of the various movable parts of the valve gear which remain stationary with respect to each other for any constant speed, it can not instantly transmit the regulating motion for which it is designed. In order to reduce this delayed action, this Westinghouse gear includes a vibratory motion illustrated in Fig. 297. *A B C E* is a governor lever which turns about *C* as the point *B* is moved up or down by the governor. For any constant speed of the turbine, *B* is stationary and so is *E*. *A* connects to a dashpot filled with oil to act as a damper on the governor, thus steadying the control. *D E F* is a double-arm rocker pivoted to the end of the governor lever at *E*. The end *D* of the rocker is kept in constant motion by the rotating cam represented at *1*, this cam receiving its motion as indicated through a pair of spur gear wheels *2*, and through the worm and wheel *3* and *4*. The spur gears are employed also to operate an oil pump. With *E* stationary and *D* vibrating, the entire linkage from *F* to the primary valve *V* is constantly oscillating. The constant vibration of the pilot valve up and down will admit oil pressure alternately each cycle of the valve gear to both sides of the relay piston *Z* and cause both it and the main valve also to oscillate in unison, but to a lesser degree. When such oscillation occurs with the valve *V* nearly closed, as might be the case with high speed and small load, it would result in the admission of steam by a series of puffs, but when the turbine is running under any ordinary conditions the valve *V* is lifted so far from its seat that the oscillation of the valve has no appreciable effect on the steady blast of the steam.

475. An auxiliary safety pilot valve is shown at *41* in Fig. 297. It is moved by a piston shown at *41* and this in turn is operated by a safety stop governor, which, when tripped, allows steam to enter and drive down this piston and the piston valve *X* until the ports *35* and *36* are open to oil pressure from *25* through *39* to the under side of *Z*. As *Z* rises, the main valve *V* closes irrespective of the position of the governor-controlled pilot valve. When the auxiliary valve *X* has dropped, the ports *32* and *31* are open to release through *28* and *23* to the release pipe *22*.

476. The spring at *53*, Fig. 296, is used to close the primary valve *V*, while the spring at *19* is used to relieve the mechanism of strain. These details of construction are not essential to a general understanding of the turbine gear when running under regular con-

Digitized by Google

ditions. It may be explained, however, that with the turbine at rest and oil pressure removed, the spring *53* will keep the valve *V* closed and the piston *Z* at the top of its stroke. Also, with the turbine at rest, the governor weights will be full in, and the lever *N O* at its highest position, which would cause a strain on the link *20*. This strain is taken up by the spring *19*. In case of failure of oil supply while the turbine is running, the spring *53* will close the main valve.

477. In order to aid the control of the speed regulation, an auxiliary spring is added at *L*. This is a tension spring and its pull on the rocker arm *L K J* may be increased or decreased by a handwheel *14* or by a motor *15* by throwing a switch. Stops are placed on the extension of the threaded rod at *16* and *18*, and they control the range of action of the spring by breaking contact when one or the other reaches the switch at *17*. This auxiliary spring, through the several links and levers, adds to or decreases the compression in the main governor spring *13*.

478. The various adjustments for this valve gear as issued by the Westinghouse Machine Company are as follows:

With relay and governor connected and oil pressure established, the turbine revolving slowly so as to get the oscillation of lever *L K J* and governor weights in innermost position, the link *I M* or *Q 21* should be adjusted so that the oil operating piston *Z* is at the extreme bottom of its stroke, and either link so adjusted that if *Q 21* be lengthened or *I M* shortened one and one-half turns it will cause a slight motion of the piston. In adjusting links *I M* or *Q 21* it is advisable to have the floating lever horizontal when the oil-operating piston *Z* is in mid position and relay plunger *Y* central.

With governor dashpot piston *5* held about $^{13}/_{16}$ inch from upper end of its travel the oil-operating piston *Z* should be in its uppermost position and have no oscillation. This figure must not be less than $\frac{1}{2}$ inch.

The auxiliary spring at *L* to be first adjusted so that with the governor weights in their innermost position it will have practically no tension. Then the main governor spring to be adjusted so that the turbine runs at 5 per cent below normal speed at no load. With the above conditions and the auxiliary spring then tightened until the turbine runs at normal speed, the speed variation between full load and friction load to be in accordance with contract.

Total travel of clutch *B 7* with governor disconnected from relay plunger *Y* = 3 inches; with governor connected to relay plunger, about $2\frac{5}{8}$ inches.

Digitized by Google

After all governor adjustments have been made, adjust position of stop *16* so that circuit is opened when the speed of turbine is raised 5 per cent above normal speed.

Adjust position of stop *18* so that circuit is opened by the time the auxiliary spring is relieved of tension while governor weights are in their innermost position.

Adjust the screw *43* so that secondary valve will open when primary inlet pressure reaches a maximum or within about 10 pounds of throttle pressure.

With automatic stop piston *41* at upper end of its stroke the piston valves X and X_1 should be central over ports *31* and *35;* with the piston in lowest position X and X_1 should be central over *34* and *38*. These adjustments are for sizes 215 condensing and 218 condensing Westinghouse turbines.

Westinghouse Steam-Operated Relay Valve Gear

479. The steam relay valve gear which is in use on many Westinghouse steam turbines of earlier construction and which is still used on all Parsons turbines in Europe, is illustrated in its latest form as to details of construction in Fig. 299. The main steam pipe is shown at A. A small steam passageway shown at B leads to the under side of the piston D. This passageway is here shown in the plane of the section, but on the turbine itself it is in front of this plane, and it has a needle valve control similar to that shown at S. There are two other openings to the space under the piston D; one, the pipe C which is stopped by a check valve which is under the control of the safety governor and opens only in case of emergency, and the other the port E which is stopped by a piston valve L which is under control of the operating governor. F is a dashpot piston.

480. While the turbine is running under its rated speed the piston valve L keeps the port E closed and allows the live-steam pressure from B to act on the bottom of the piston D and thus keep open the main or primary valve X. When the turbine speed exceeds the normal the pilot valve L is lowered by the governor and steam is allowed to escape through the port K in the valve bushing to the exhaust chamber J which is connected with an exhaust pipe not shown. The chamber M is for leakage and drainage. As the steam escapes through E the pressure under the piston D decreases and the spring G drives the valve rod and valve X down and closes the valve opening by an amount sufficient to regulate the speed, and the governor again moves the pilot valve L so as to close the port E. In addition, the pilot valve L is given a slight up-and-down motion of uniform

Digitized by Google

range by an oscillating device such as is shown in connection with the oil relay gear in Fig. 297. The position of this vibratory range of motion is regulated by the governor. Thus the pilot valve L opens at regular intervals and for longer or shorter periods at each interval

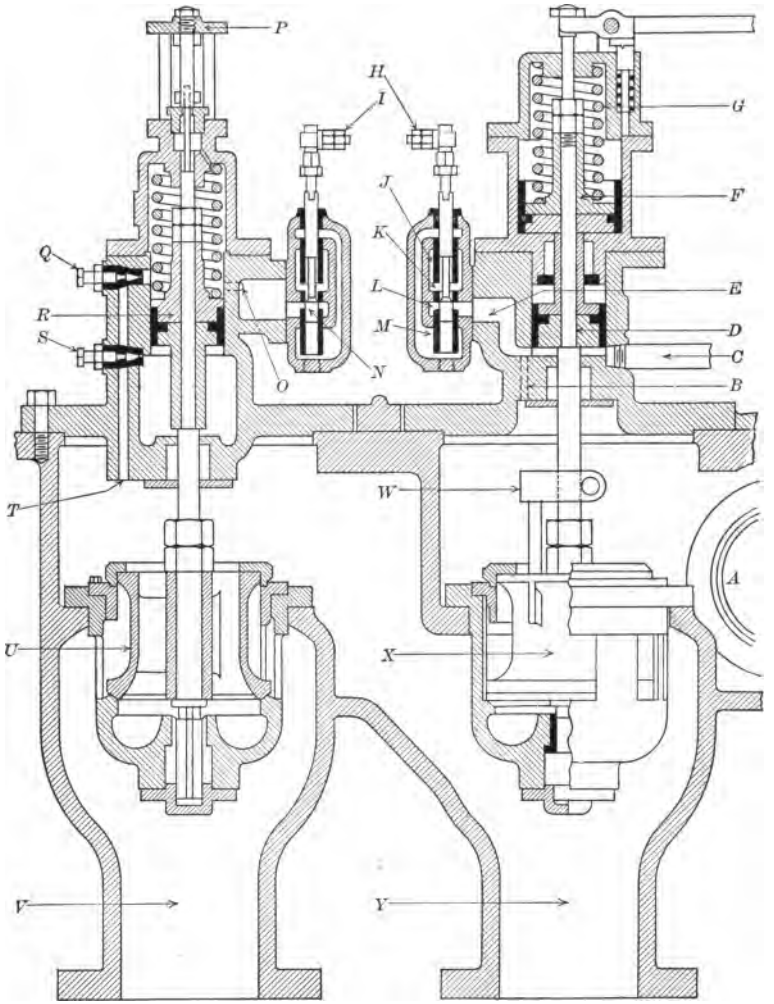

FIG. 299.—WESTINGHOUSE STEAM-OPERATED RELAY VALVE GEAR.

according to the load and speed of the turbine, and the primary valve X has a continuous vibrating motion, the limiting planes of vibration being so located, under light loads, for example, as to permit the valve X to seat each time. Under normal load, the limiting

Digitized by Google

planes of vibration will both be above the valve seat and there will be continuous valve opening, although the area of such opening will vary with the vibration of the valve. The result is that the steam enters the turbine in a series of puffs or blasts, which are separate and distinct, or merged, according to the location of the limiting vibratory planes as just described.

481. A secondary admission valve U is provided and is under the control of the same governor as the primary valve X. The pilot valve N which immediately controls the motion of the secondary admission valve U has a larger lap than the pilot valve L and this larger lap is so proportioned that the secondary valve does not come into action until the primary valve X has attained its maximum opening. A further adjustment for controlling the action of the secondary valve is provided by the screw at P.

482. The actual steam pressure necessary to move the secondary valve is supplied as follows: When the turbine is running at or under the rated load, the secondary valve U remains stationary on its seat and steam is admitted through the passageway T and the two needle valves S and Q to both sides of the piston R. As the turbine reaches about full load the pilot valve N drops, opening the exhaust port at N for the escape of steam from the upper side of the piston R through the small passageway shown at O. The piston R then rises against the pressure of the spring and opens the secondary valve U. If the turbine exceeds the normal speed the pilot valve N rises, thus closing the exhaust from the upper side of the piston R and again putting it in balance when the spring closes the valve U. The steam admitted by the secondary valve passes directly to the annular space at the beginning of the intermediate drum of the rotor where the working steam areas are greater.

De Laval Steam Turbine Valve Gear

483. The valve gear and one of the types of governor used on the De Laval steam turbine are shown in Figs. 300 and 301. The valve is of the double-seat poppet type and is located in the main steam pipe supply line as illustrated at $A\ A_1$ in the detail view Fig. 301. It is there shown open and is operated directly by the arm $B\ C$ which is on a shaft which passes through a steam pipe stuffing box at B, and on the outside is keyed a bell crank $D\ B\ C_1$, the arm $B\ C_1$ being a balance arm with a spring F at the end while the arm $B\ D$ connects with the governor. When the turbine starts up or when the turbine is under full load, the poppet valve is wide open and as the

Digitized by Google

load decreases or as the speed increases the valve $A\,A_1$ is drawn down by the governor as explained in the following paragraph. At E is a wire screen steam strainer. The materials used for the valve body, disks, and seats depend upon the pressure and temperature

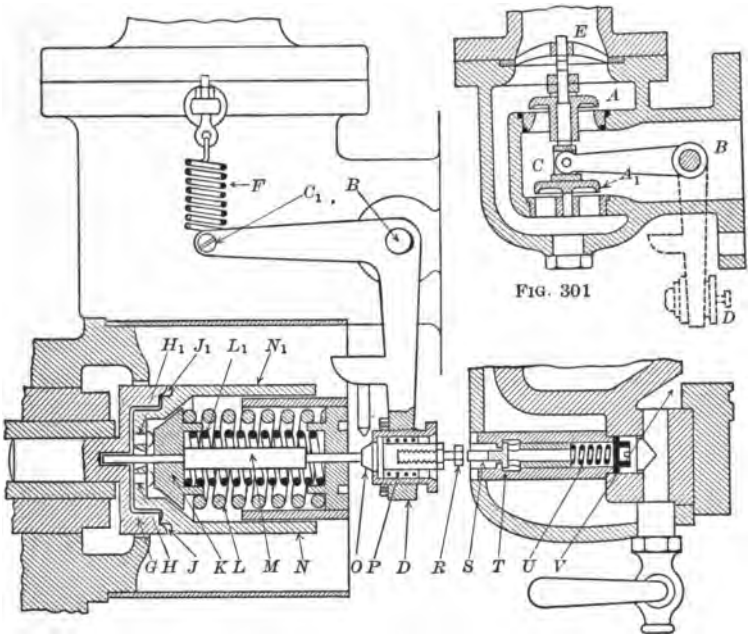

FIG. 301

FIG. 300

FIGS. 300 AND 301.—DE LAVAL STEAM TURBINE VALVE GEAR AND GOVERNOR

of the steam. For ordinary pressures the valve body is made of cast iron and the disks and seats of non-corrosive metal, but for superheated steam, steel is used throughout.

484. The De Laval governor here illustrated acts through the centrifugal force of the steel-shell weights $N\,N_1$, Fig. 300, which contain pins at $H\,H_1$ and knife edges at $J\,J_1$ which fulcrum on the disk G. The pins $H\,H_1$ bear against the collar K which takes the thrust of the governor springs at $L\,L_1$. As the governor weights fly out the spindle M, attached to K, moves out and swings the arm $D\,B$ to the right and the arms $B\,C_1$ and $B\,C$ down, thus partially closing the valve and reducing the steam supply.

485. An automatic safety vacuum governor is also operated by the main governor weights, there being a flexible or spring connection at P. If the turbine speed should go above a predetermined point

Digitized by Google

the governor weights N N_1 would have sufficient power to overcome the spring P, which is stronger than the spring F and would move the pin R and the valve stem S and open the valve T, thus admitting air to the vacuum chamber at V in which the turbine wheel revolves. This would immediately put an air brake on the wheel and prevent any acceleration of speed. This method applies only when the turbine is exhausting into its own condenser. When several turbines are exhausting into a common condenser the passageway beyond the air valve T leads to a piston that operates a butterfly valve which is placed between the turbine wheel casing and the condenser. The admission of air behind this piston chokes the exhaust of its own turbine and thus destroys the vacuum in that wheel case without disturbing the vacuum in the condenser and other turbine casings.

486. For controlling the speed of the De Laval turbines of the larger sizes, or where exceptionally close speed regulation is required, a vertical governor of the Jahns type, driven from the turbine shaft by worm gearing, is employed. It consists of two weights guided by rollers so that centrifugal force will move them in opposite directions along straight lines at right angles to the revolving spindle. The outward radial motion of the weights is resisted by governor springs. A bell crank with a roller at the end of each arm is mounted on the governor case and directly under each of the governor weights, the roller on the vertical arm fitting in a vertical slot of the governor weights and the roller on the horizontal arm fitting in a slot in a sliding sleeve which surrounds the governor spindle and which transmits its up-and-down motion through suitable links and levers to the throttle valve.

487. An emergency governor used on the De Laval turbine consists of a radial bolt set in a revolving disk. Under the action of centrifugal force, it presses against a spiral spring and at a pre-determined speed projects far enough to strike a small lever and trip a mechanism which immediately closes a butterfly valve in the steam inlet opening. In some types of the De Laval turbine the emergency governor trips a small valve which releases steam pressure from under a small piston in a combined trip and throttle valve, the balanced disk of which is immediately forced to close.

END OF VOLUME I

Digitized by Google

INDEX TO VOLUME I

A

PAGE

Actual steam velocity..... 19
Adjustable piston-valve rings....77, 78
pressure-plate valves..... 83
Adjusting valve gear for reciprocating engines.....131
valve gear for steam turbine..241
Air compressor, design of valve for.. 97
Allen valve design.....37, 40
Allen valve gear.....179
American Ball engine.....155
American semi-plug piston valve.. 79
Ames-Stumpf "Una-Flow" engine.212
Analysis of link motion.....162
Angle of advance.....4, 10
of advance for Corliss engine..118
of advance for given cut-off...169
of lead..... 4
Angular accelerating governor..... 71
Angularity of connecting-rod..... 7
of eccentric rod..... 8
Armington & Sims governor.....154
Auchincloss method of link-motion analysis.....162
Automatic cut-off governors.....158
Auxiliary valves.....88–92
Average steam velocity..... 19

B

Backing eccentric rod.....161
Baker valve gear.....192
Balanced Corliss valve.....144
poppet valves.....201
valves.....39, 81–88, 144, 201
Baldwin locomotive piston valve... 81
Ball telescopic valve..... 85
Bell crank.....61, 161
crank, location for equalized cut-off in link motions.....172
Bent rocker.....30, 59, 115
Bilgram diagram..... 42
Box link.....174
Braemme-Marshall valve gear.....190
Bridge, valve seat.....2, 7, 25
Bridle rod.....175, 203
Buckeye flat valve.....103
governor.....151
round valve.....103
Butterfly valve.....52, 54

C

Cams..... 64
Cam valve gear, positive.....144
Center-line relation between valve gear and engine cylinder.....167
Centrifugal governor.....69, 126, 198
Centrifugal shaft governor..... 71
Circle, eccentric..... 9
Zeuner..... 10
Closed rods.....165
Clutch rods.....120
Clutches, disengaging.....130
Combination lever.....183
Compound radial valve gear.....190
Compression..... 9
equalizing by unequal laps.... 26
Corliss cut-off limited with single eccentric.....112, 138
engine speed....110, 113, 120, 141
gear advantages.....108
gear motion-diagram.....143
valve and gear.....107–133
valve balance..... 88
valve-gear design.....115
valve gear, Nordberg.....137
valves, sizes of.....113
Crank end, definition of..... 3
Crossed rods.....165
Curtis steam turbine valve gears, 220–234
Curved-slot eccentric.....147, 158
eccentric, location of pivot of.....149

Digitized by Google

PAGE

Cushioning, method of dashpot, 114, 130
Cut-off....9, 12
equalized at all speeds....172
governors....158
valves....88–106
Cut-off, equalizing by unequal laps. 26
equalizing with equal laps.... 30
Cycle, principal phases of.... 12
Cylindrical valves....51, 53

D

Dashpot, Hewes & Phillips vacuum. 113
oil-filled for governor control, 127, 234, 236
piston travel of....117
Rice & Sargent spring-actuated 130
time required to close....113
Dead center, definition.... 3
Dead points in valve gears...118, 143
De Laval steam turbine valve gear. 244
Diagram, Bilgram.... 42
Reuleaux.... 44
sinusoidal.... 48
valve ellipse.... 45
Zeuner....9, 11, 23
Double rotating eccentrics....154
Double-bar link....174
Double-lead and double-admission. 38
Double-ported valve design.... 92
Double-seat poppet valve, 195, 197, 199, 227
Drafting-table problems, 23, 38, 92, 97, 115, 159, 176, 205
D-valve.... 7
design.... 23
limited use of.... 33

E

Eccentric and rod....1, 59
circle....9, 10
replaced by swinging pivot....150
sheave....1, 59
Eccentric, setting of....131
straight-slot....197
virtual....162, 176
Eccentricity, definition of.... 2
Eccentrics....146–160

PAGE

Elementary valve....1, 4
Ellipse valve diagram.... 45
Emergency trip gear....231, 246
valve, combined throttle and..221
End valves....51, 54
Equalizing compression, unequal laps.... 26
cut-off in link motions....171
cut-off, equal laps.... 30
cut-off, unequal laps.... 26
Equivalent eccentric....177
Exhaust closure....12, 27
lap....7, 12
lap, negative.... 12
lead.... 12
passageway in cylinder.... 97
port....7, 12, 26

F

Fink gear....180
Fitchburg governor....153
piston valve and gear.... 78
Fixed eccentrics....146
pressure-plate valves.... 83
Flat valve....51, 52
Flexible pressure-plate valves.... 83
Floating arm, Nordberg....138
lever.... 62
valve gear....202, 205, 206, 212
Fly-ball governor.... 70
Forbes steering engine....206
Formula for port and pipe sizes... 17
for steam lap, Pfeiffer's.... 16
for width of bridge.... 25
for width of exhaust port.... 26
Forward eccentric rod....161
stroke, definition.... 3
Friction of sliding valves.... 50
Full gear backward....161
gear forward....161
Fundamental valve forms.... 50
valve gears.... 55

G

Gonzenbach valve.... 89
Gooch valve gear....179
Governor, adjusting the....131
American Ball....155

Digitized by Google

PAGE

Governor, Armington & Sims.....154
Buckeye.....151
Curtis steam turbine.....233
De Laval steam turbine.....245
Fitchburg.....153
Jahns.....246
Pickering.....159
revolving pendulum.....159
Rites.....156
Rites on Rice & Sargent engine.....123
Sargent.....126
shaft.....70, 151, 158
"straight-line".....151
Westinghouse steam engine...151
Westinghouse steam turbine, 235, 239
Governors..... 69
automatic cut-off.....158
throttling.....158
Gridiron valve.....104

H

Hackworth valve gear.....186
Harmonic motion..... 56
Head end, definition..... 3
Hewes & Phillips Corliss gear.....107
High-speed valve gear, Nordberg..141
Hydraulic valve gear, Curtis.....220
valve gear, Westinghouse.....237

I

"Ideal" piston valve..... 76
Indicator card and valve ellipse... 47
Indicator cards for equalized release and exhaust closure... 29
cards from curved- and straight-slot eccentrics.....157
cards from straight-slot and rotating eccentrics.....159
cards, effect of open and crossed rods on.....176
cards, uniflow engine.....214–216
Inertia governors.....69, 124, 198
Infinite connecting rod.....7, 55
Inside admission.....184, 206
lap..... 6
Intermediate gear.....161

PAGE

J

"Jack Wilson" high-pressure slide valve..... 86
Joy valve gear.....190

L

Lap-and-lead lever.....183
Lap angle..... 4
Lap, exhaust.....6, 7, 12
inside..... 6
negative..... 12
outside..... 12
positive..... 12
steam..... 4
Lead.....4, 38
angle..... 4
in link motions.....173
Lead, exhaust..... 12
Length of port..... 18
Lentz valve gear.....197
Levers, floating..... 62
Lifting valves..... 52
Liners, valve.....74, 76, 80
Link-motion analysis.....162
Links.....61, 161
Locomotive balanced valve..... 39
piston valve, Vauclain..... 81
Long-range valve gear, Nordberg..138
Lubrication, crank case, for steam engine.....135

M

Marshall valve gear.....188
Marshall, J. T., valve gear.....182
McIntosh, Seymour, steam valve gears.....104
Mechanical valve gear, Curtis steam turbine.....230
Meyer valve..... 92
Meyer valve-gear design.....97–102
Mid-gear.....161
travel.....168
Models, use of, in valve-gear design.174

N

Negative exhaust lap..... 12
Nordberg steam engines.....137–145

Digitized by Google

PAGE

Notches, valve gear.....161
Note-book problems.....20–23
Nozzle and buckets, Curtis steam turbine.....225

O

Offset crank and connecting rod.57, 136
cylinder, Westinghouse.....136
Oil dashpots.....127, 234, 236
Oil-operated relay valve gear.....237
Open link.....174
rods.....165
Opening, exhaust port..... 12
steam port.....7, 18
Operation of simple steam engine.. 3
Outside admission.....184, 206
lap..... 12
Over, running.....3, 146
Overtravel..... 18

P

Parallelogram motion.....140
Pendulum governor, revolving.70, 159
Pfeiffer's steam-lap formula..... 16
Pickering governor.....159
Pilot valves, steam turbines...226, 237
Piston, exhaust valve in.....219
relay for steam turbine.....237
Piston valve.....51, 53, 81
valve design..... 73
valve rings.....74, 77
valve, American semi-plug.... 79
valve, double-ported.....77, 78
valve, "Ideal"..... 76
valve, Vauclain..... 81
Polonceau valve..... 91
Poppet valve.....52, 54
valve types.....200
valve, double-seat, 195, 197, 199, 227
Port, length of..... 18
opening.....7, 18
width.....7, 18
Ports in valve castings..... 95
Porter-Allen valve gear.....181
Positive exhaust lap..... 12
Practical steam-engine valves..... 73
Preadmission.....158

PAGE

Pressure on unbalanced flat valves. 50
Pressure-plate valves.....82–87
Primary and secondary valves....235
Problems, drafting-table, 23, 38, 92, 97, 115, 159, 176, 205
exercise, explained.....13–16
exercise, original.....17, 148
note-book.....20–23
special.....34, 35

R

Radial cam..... 65
valve gears.....186
Radius rods.....107
Relay valve gear, Westinghouse, 237, 242
Release.....9, 12
gear for Corliss engines..109, 121
equalizing by unequal laps.... 27
Return stroke, definition..... 3
Reuleaux diagram..... 44
Reversing lever.....161
of steam engines.....146, 162
valve gears.....161–211
with eccentrics.....148
Revolving pendulum governors.70, 159
Rice & Sargent Corliss gear...119–133
Rice steam turbine gears.....230
Riding valves.....88, 91
Rings for piston valves.....74, 77
Rites governor.....156
governor on Rice & Sargent engine.....123
Rock shaft.....161, 176, 194, 203
Rocker arm, effect of.30, 59, 115, 161
compound in Buckeye gear....103
Rocking or rotating valves.51, 106, 117
Rolling cam..... 67
Rotating eccentrics.....146, 151, 159
Running over, definition..... 3
under, definition..... 3

S

"S," value of, in Meyer valve design..... 99
Saddle block.....161
Saddle pin, location of.....161
Safety devices for Corliss engines, 111, 127, 140, 142

Digitized by Google

PAGE

Sargent governor....126
Scotch yoke....7, 56
Self-centering valve gear....202
Setting of eccentric, valve and governor....131
valve gear, reciprocating engine....131
valve gear, steam turbine....241
Shaft governors....70, 151, 158
Shifting links....175
Single-acting steam engines....133
Sinusoidal valve diagram.... 48
Size of ports in valve castings.... 95
Sizes of ports and pipes.... 17
Skeleton link....175
Skinner pressure-plate valve.... 86
"Universal Unaflow" engine..216
Sleeve valves....51, 53
"Slip"....165, 174
Slip joint....207
Slotted eccentrics....147
Speed of Corliss engines, 110, 113, 120, 141
Splash lubrication for steam engines....135
Springs, adjusting for governors, 126, 133
Stationary link....175
piston....113
Steam admission, reciprocating engine....8, 12, 38, 211
admission, steam turbine, 221, 235, 244
Steam chest illustrated.... 2
Steam lap.... 4
lap formula, Pfeiffer's.... 16
Steam port opening....7, 17, 18
port width....7, 18
velocities....8, 20, 113
velocities, actual and average.. 19
Steam-actuated valve gear, Curtis....223
Steam-operated valve gear, Westinghouse....242
Steering-gear engines....206–211
Stephenson valve gear...161, 167, 176
Stevens valve gear....194
"Straight-Line" governor....151
valve.... 84

PAGE

Straight-slot eccentric, 147, 153, 158, 159, 197
Sulzer valve gear....199
Superheated steam, effect of, on valve gears....145
Swinging eccentrics....147, 152
Synchronizing device, Curtis steam turbine....220

T

Tangential accelerating governor... 71
Template, link....169
Throttling governors....158
Throw of eccentric.... 11
Toe-and-wiper cams.... 66
Toggle-joint action....105
Trick valve.... 37
Trip gear, Curtis emergency....231
mechanism, Corliss, 69, 108, 111, 137
Tumbling shaft, location of....172
Turbine valve gears, steam...220–246

U

Under, running....3, 146
Uniflow steam engine....211–219

V

Vacuum dashpot....113
Valve, Allen....37, 40
Atlas....107
Ball.... 85
Buckeye, flat and round....103
butterfly.... 52
combined throttle and emergency....229
Corliss....107, 120, 143
Corliss balanced exhaust....144
D-....7, 23, 33, 50
double-ported.... 92
double-seat poppet..195–200, 227
flat.... 51
Gonzenbach.... 89
gridiron....104
"Jack Wilson" high pressure.. 86
locomotive balanced.... 39
McIntosh, Seymour & Co....104
Meyer.... 92

Digitized by Google

PAGE

Valve pilot....226, 237
piston....51, 73
piston, adjustable....77, 78
piston, American semi-plug... 79
piston, Baldwin locomotive... 81
piston, double-ported....77, 78
piston, Fitchburg.... 78
piston, "Ideal".... 76
Polonceau.... 91
poppet.... 52
poppet telescope....217
Skinner pressure-plate.... 86
"Straight-line".... 84
Wheelock....106
Valves, auxiliary, cut-off, riding.88–106
cylindrical end.... 51
cylindrical surface.... 51
for reciprocating steam engines. 73
friction of sliding.... 50
lifting.... 52
pressure-plate....82–87
reciprocating.... 51
rocking or rotating....51, 106
sleeve.... 51
Valve diagram, Bilgram.... 42
ellipse.... 45
Reuleaux.... 44
sinusoidal.... 48
Zeuner....9, 11, 23
Valve forms, fundamental.... 50
Valve in main piston of engine....219
Valve liner or sleeve....74, 76, 80
Valve motion diagram, Nordberg..142
Valve-seat layout.... 25
Valve travel as affected by rocker arms.... 31
Valve travel, half.... 7
Valve gear, Allen....179
Ames-Stumpf "Una-Flow"....212
Baker....192
Corliss....107–133, 137–145
Curtis hydraulic....220
Curtis mechanical....230
Curtis steam-actuated....223
definition of.... 1
De Laval steam turbine..244
equivalent to eccentric...162
Fink....180

PAGE

Valve gear, floating or self-centering....202, 205
Gooch....179
Hackworth....186
Hewes & Phillips....107
Joy....190
Lentz....197
Marshall....188
Marshall, J. T....182
Nordberg....137
Porter-Allen....181
positive cam....144
radial....186
Rice & Sargent....121
Skinner "Universal Unaflow"....216
Stephenson....161
Stevens....194
Sulzer....199
vibrating....240
Walschaert....183
Westinghouse "Direct"..235
Westinghouse hydraulic or oil-relay....237
Westinghouse single-acting....134
Westinghouse steam-operated....242
Valve gears, fundamental.... 55
practical steam engine, 161–211
steam turbine....220–246
steering engine....206–211
Valve gear dead points....118, 143
Valve gear models in engine design.174
Valve gear setting for reciprocating engines....131
Valve gear setting for steam turbines....241
Vauclain locomotive valve.... 81
Velocity of steam....18–20, 113
Vibrating rod.... 61
Virtual eccentric....162, 176

W

Walschaert valve gear....183
Westinghouse "Junior" engine....134
"Standard" engine....135

Digitized by Google

PAGE

Westinghouse steam-engine governor....152
steam turbines....234–244
Width of cut-off blocks in Meyer valve....101
of exhaust port....7, 26
of port....7, 18
of port opening....7, 18
Williamson steering gear....208
Wristplate....107, 120
Wristplate cam.... 78

Z

PAGE

Zeuner circle.... 10
Zeuner circles changed by rocker arms.... 33
circles in different quadrants.. 14
diagram....9, 11, 23
diagram for cut-off valves..90, 101
diagram for double admission. 38
diagram for Meyer or riding valve.... 98

JUN 11 1915

Digitized by Google

Digitized by Google

Digitized by Google

Digitized by Google